Single Phase - General Purpose - TEFC - Cast Iron . . . B-52
Single Phase - General Purpose - TEFC - Cast Iron - C-Face . . . B-54
Single Phase - General Purpose - TEFC - Rolled Steel - Standard Efficiency . . . B-56
Single Phase - General Purpose - TEFC - Rolled Steel - Standard Efficiency - C-Face . . . B-58
Single Phase - General Purpose - ODP - Rolled Steel - Standard Efficiency . . . B-60
Single Phase - General Purpose - ODP - Rolled Steel - Standard Efficiency - C-Face . . . B-62
Single Phase - General Purpose - ODP - Rolled Steel - Premium Efficiency . . . B-64
Single Phase - General Purpose - ODP - Rolled Steel - Premium Efficiency - C-Face . . . B-66
TEFC – W22 NEMA Premium® Efficiency . . . B-68
C & D Flanges Dimensions – Valid for Cast Iron TEFC and ODP - C-Flange additional detail . . . B-70
D-Flange additional detail . . . B-70
Rolled Steel - General Purpose - Three Phase - TEFC . . . B-71
Rolled Steel - General Purpose - Three Phase - ODP . . . B-73
ODP – Cast Iron - Three Phase - General Purpose . . . B-74
Explosion Proof - Three Phase . . . B-76
Fractional - Three Phase - TEFC - NEMA Premium® . . . B-78
Fractional - Three Phase - TEFC - NEMA Premium® - C-Face . . . B-79
Fractional - Three Phase - TEFC - Standard Efficiency . . . B-80
Fractional - Three Phase - TEFC - Standard Efficiency - C-Face . . . B-81
Fractional - Three Phase - ODP - Premium Efficiency . . . B-82
Fractional - Three Phase - ODP - Premium Efficiency - C-Face . . . B-83
Fractional - Three Phase - ODP - Standard Efficiency . . . B-84
Fractional - Three Phase - ODP - Standard Efficiency - C-Face . . . B-85
Cooling Tower Motors - Three Phase - TEFC . . . B-86
Cooling Tower Motors - Three Phase - TEAO . . . B-90
CCP - JM - Three Phase - TEFC - Rolled Steel . . . B-93
CCP - JM - Three Phase - TEFC - Cast Iron . . . B-95
CCP - JP - Three Phase - TEFC - Rolled Steel . . . B-98
CCP - JP - Three Phase - TEFC - Cast Iron . . . B-100
CCP - JM - Three Phase - ODP - Rolled Steel . . . B-103
CCP - JP - Three Phase - ODP - Rolled Steel . . . B-103
IEC Metric Motors - Cast Iron Frames . . . B-106
IEC Metric Motors - Cast Iron Frames - Additional C-Flange Detail . . . B-108
IEC Metric Motors - Cast Iron Frames - Additional F-Flange Detail . . . B-109

Data subject to change without notice.

NOTES:

Single Phase - General Purpose - TEFC - Cast Iron

Frame	2E	J	A	P	AB	2F	B	EV	BA	U	N-W	Key Length
143/5T	5.5	1.457	6.457	7.244	7.126	4	6.142	0.571	2.25	0.875	2.25	1.575
182/4T	7.5	1.614	8.661	8.937	8.11	4.5	6.969	0.734	2.75	1.125	2.75	1.969
213/5T	8.5	1.791	9.764	10.787	9.212	5.5	8.858	0.929	3.5	1.375	3.375	2.48

Frame	Width	R	Depth	D	G	HB	O	HH	HK	Hole H	C	LM	S	AA	DE	NDE
143/5T	0.187	0.766	0.187	3.5	0.354	1.043	7.122	4.75	3.583	0.34	14.49	8.11	0.187	NPT 3/4”	6205 ZZ	6203 ZZ
182/4T	0.25	0.984	0.25	4.5	0.394	1.574	8.897	5.5	3.7	0.41	17.012	9.134	0.25	NPT 1”	6207 ZZ	6206 ZZ
213/5T	0.313	1.203	0.313	5.25	0.669	2.362	10.84	7	3.7	0.41	20.095	9.134	0.313	NPT 1”	6308 ZZ	6206 ZZ

Frames 143/5

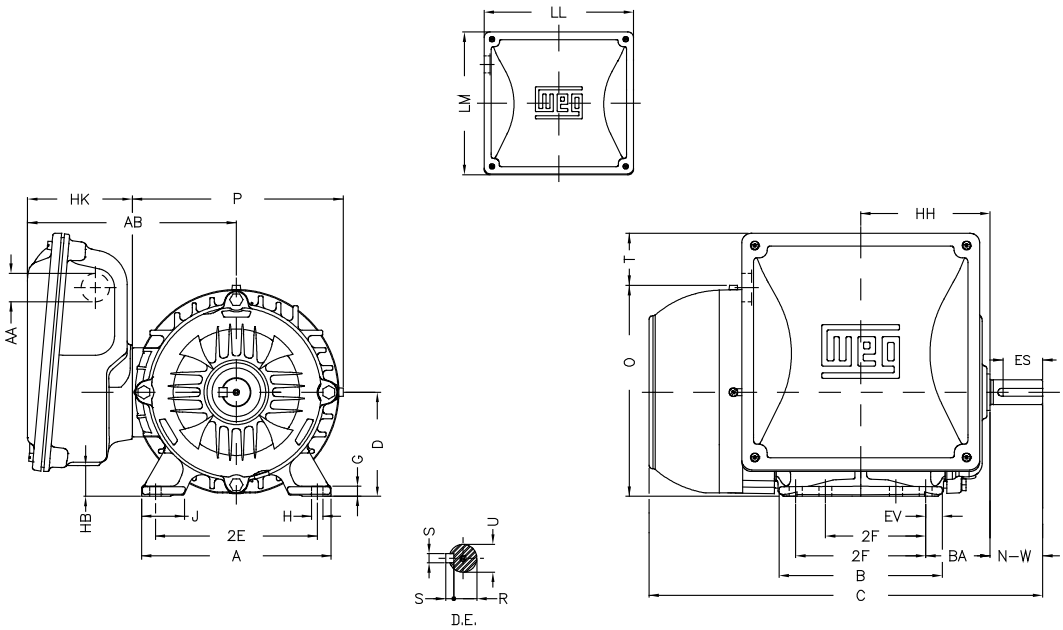

Data subject to change without notice.

Single Phase - General Purpose - TEFC - Cast Iron

Frames 182/4

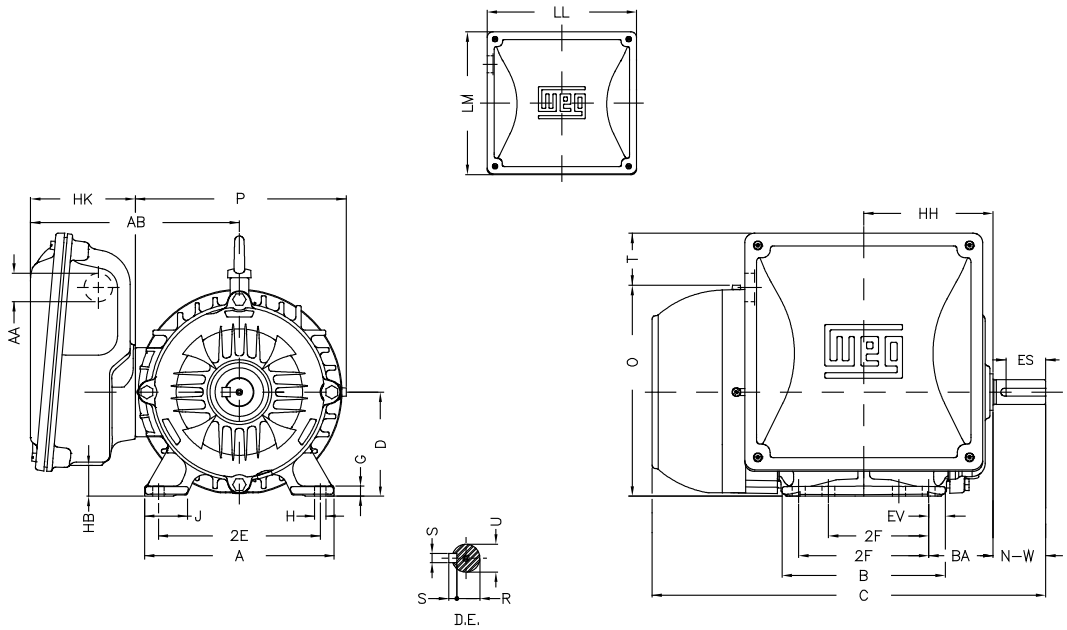

Frame 213/5

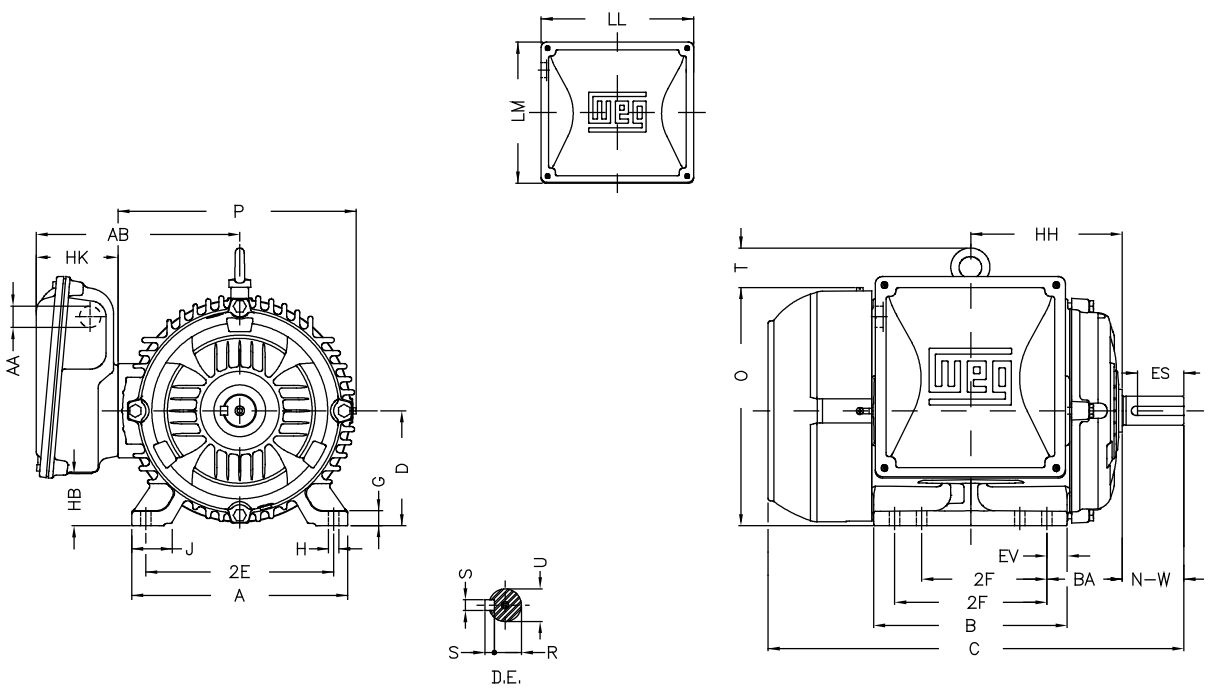

Single Phase - General Purpose - TEFC - Cast Iron - C-Face

Frame	Type	Flange	Size	BC	AJ	AK	BD	S	T	AH	Angle	BF Number
143/5T	C	C	FC-149	0.125	5.875	4.5	6.5	UNC 3/8"x16	0.157	2.125	45°	4
182/4T	C	C	FC-184	0.125	7.25	8.5	8.875	UNC 1/2"x13	0.25	2.625	45°	4
213/5T	C	C	FC-184	0.25	7.25	8.5	8.875	UNC 1/2"x13	0.25	3.125	45°	4

Frames 143/5

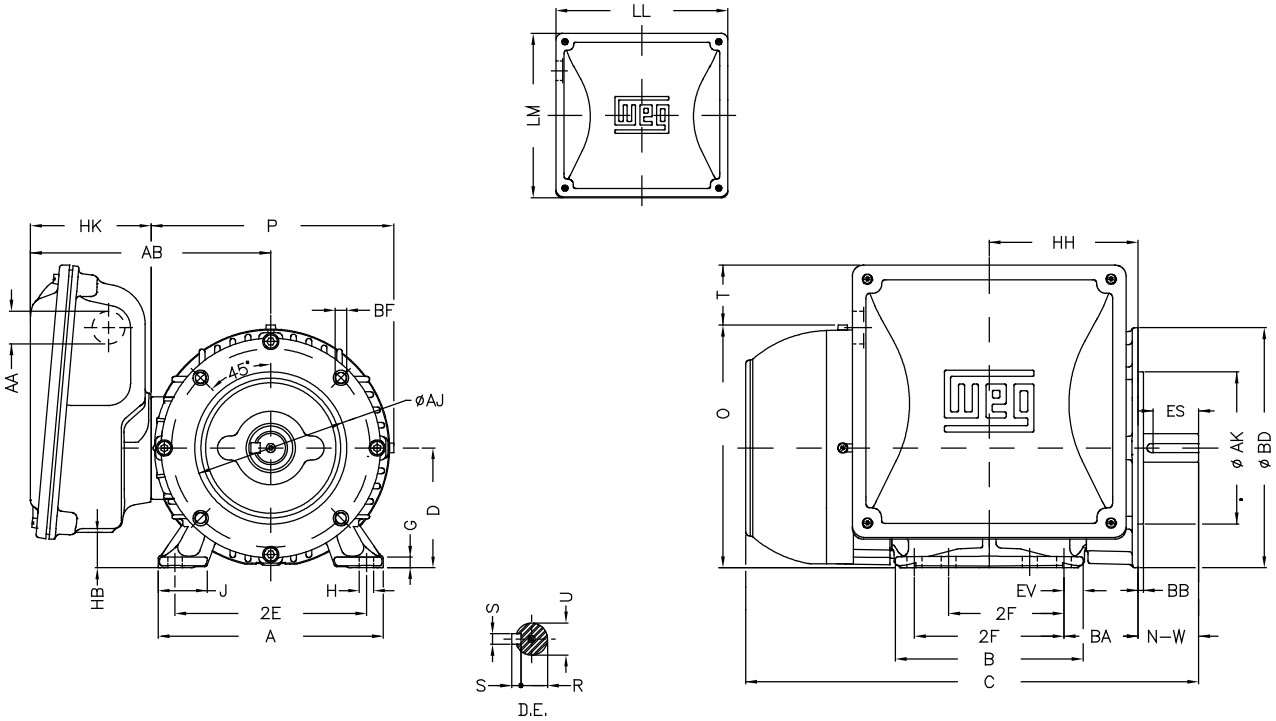

Single Phase - General Purpose - TEFC - Cast Iron - C-Face

Frames 182/4

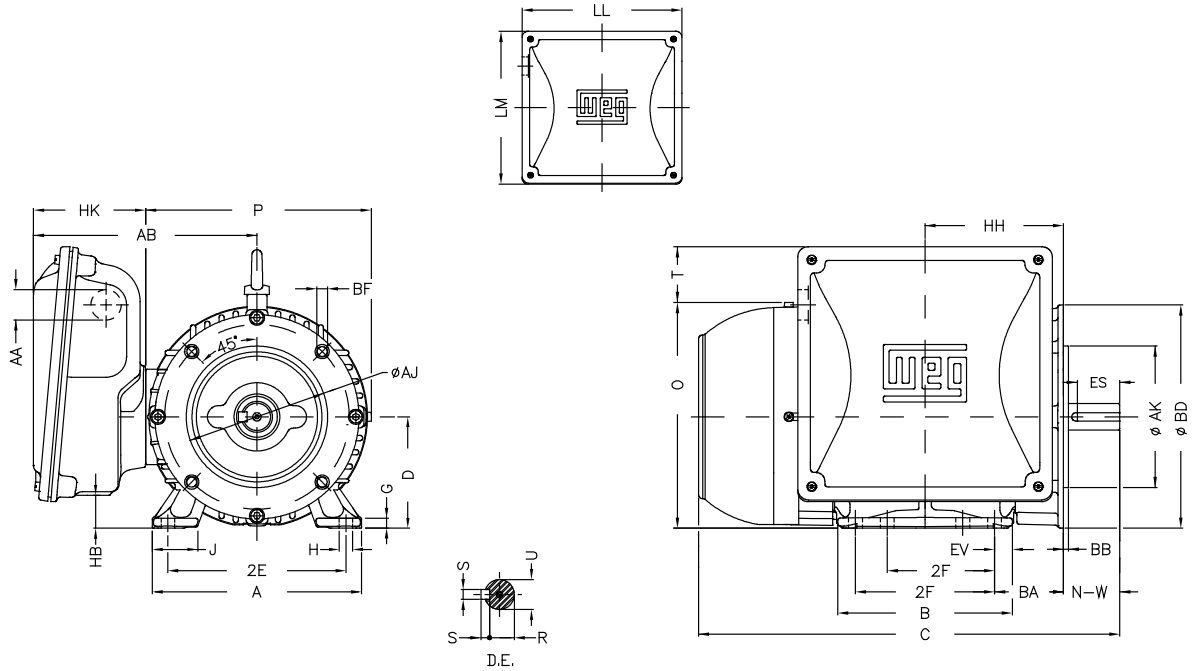

Frame 213/5

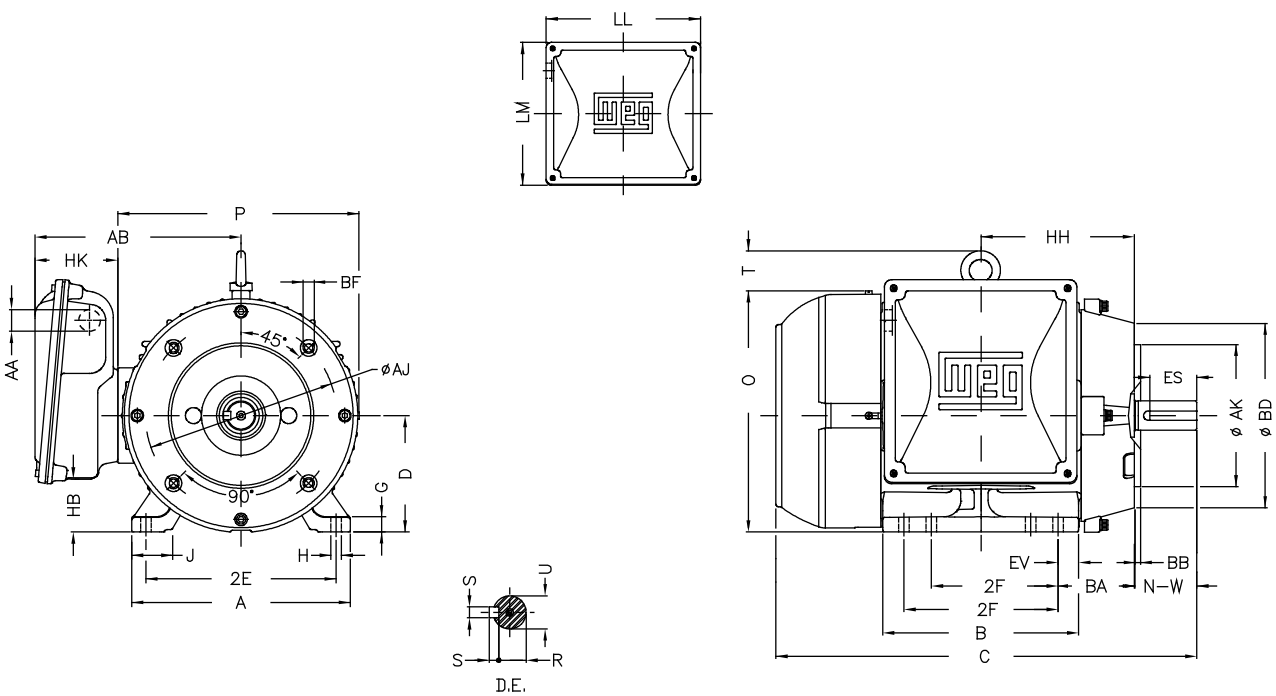

Single Phase - General Purpose - TEFC - Rolled Steel - Standard Efficiency

Frame	2E	J	A	P	AH	2F	B	BA	CH	U	N-W	Key Length
48	4.236	1.835	6.142	6.693	1.689	2.748	3.543	2.5	1.417	0.5	1.5	1.26
W56	4.874	1.62	6.535	6.693	2.063	3	4.016	2.75	1.417	0.625	1.874	1.417
56	4.874	1.732	6.535	7.638	2.062	3	4.016	2.75	1.377	0.625	1.874	1.417
56H	4.874	1.732	6.535	7.638	2.062	3.000/5.000	6.496	2.75	1.377	0.625	1.874	1.417
143/5T	5.5	1.732	6.535	7.638	2.132	4.000/5.000	6.496	2.25	1.377	0.875	2.25	1.417
182/4T	7.5	1.299	8.661	9.435	2.62	4.500/5.500	6.299	2.75	1.377	1.125	2.75	1.969
213/5T	8.5	1.575	9.449	10.965	3.129	5.500/7.000	7.953	3.5	1.929	1.375	3.38	2.48

Frame	R	Depth	D	G	O	HD	Hole H	C	AA	T	DE	NDE
48	0.451		3	0.075	5.83	6.354	0.343	*	0.881”	0.524	6203 ZZ	6202 ZZ
W56	0.517	0.187	3.5	0.12	6.33	6.854	0.343	*	0.881”	0.524	6203 ZZ	6202 ZZ
56	0.517	0.187	3.5	0.12	6.724	7.327	0.343	*	0.881”	0.603	6203 ZZ	6202 ZZ
56H	0.517	0.187	3.5	0.12	6.724	7.327	0.343	*	0.881”	0.603	6204 ZZ	6202 ZZ
143/5T	0.771	0.187	3.5	0.12	6.724	7.327	0.343	*	1.118”	0.603	6205 ZZ	6203 ZZ
182/4T	0.984	0.25	4.5	0.167	8.557	9.218	0.406	*	1.118”	0.661	6206 ZZ	6205 ZZ
213/5T	1.203	0.313	5.25	0.167	10.144	10.905	0.406	*	1.377”	0.761	6208 ZZ	6206 ZZ

** Dimension changes with output speed*

Frame 48

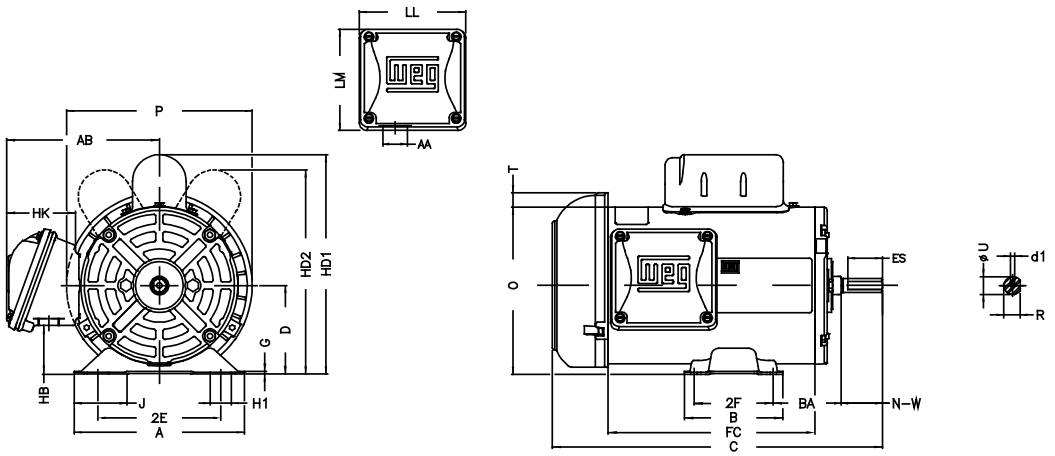

Frame W56

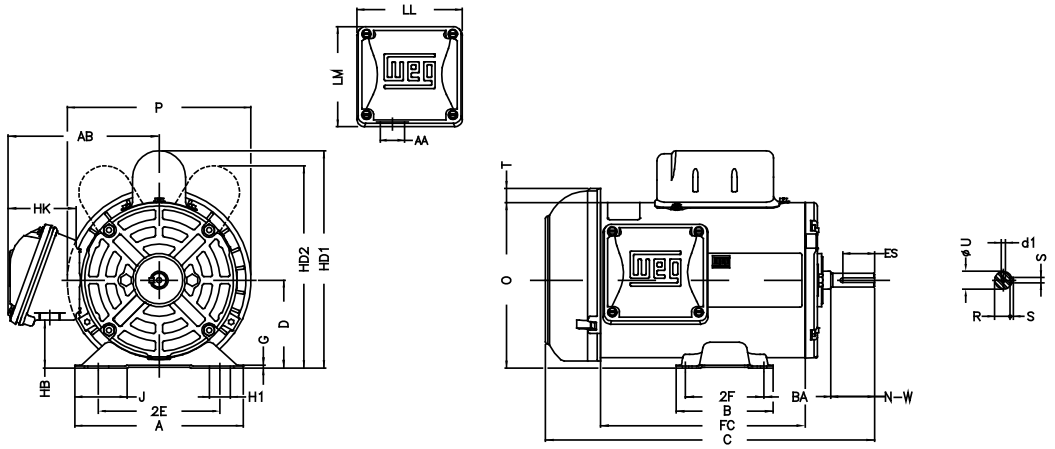

Data subject to change without notice.

Single Phase - General Purpose - TEFC - Rolled Steel - Standard Efficiency

Frame 56

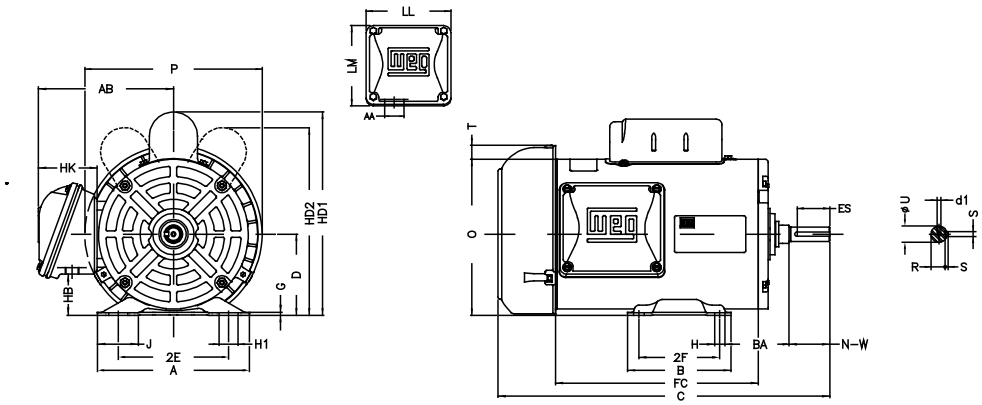

Frames 56H - 143T/5T

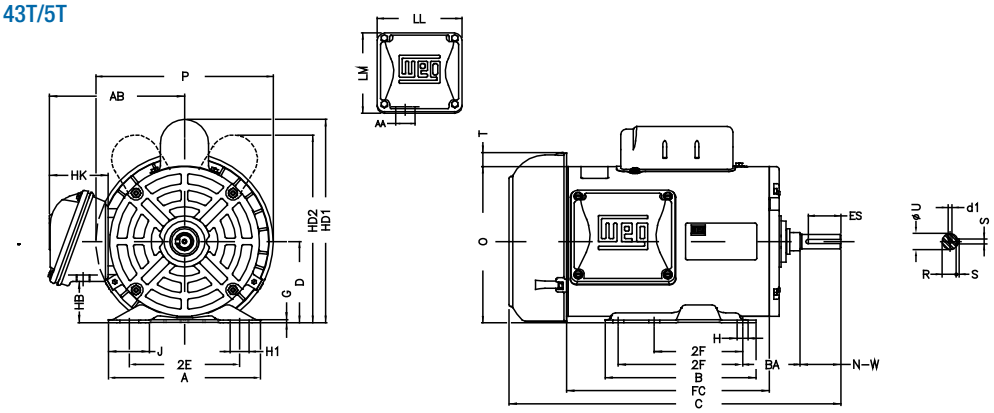

Frame 182/4T

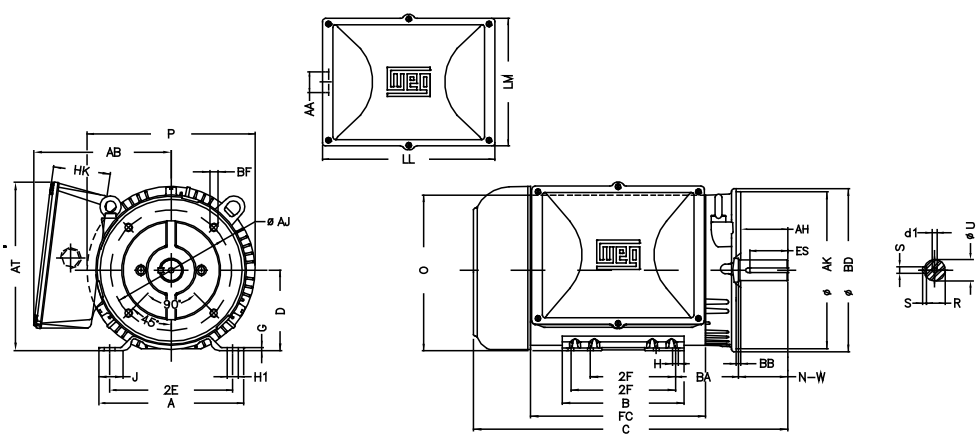

Frame 213/5T

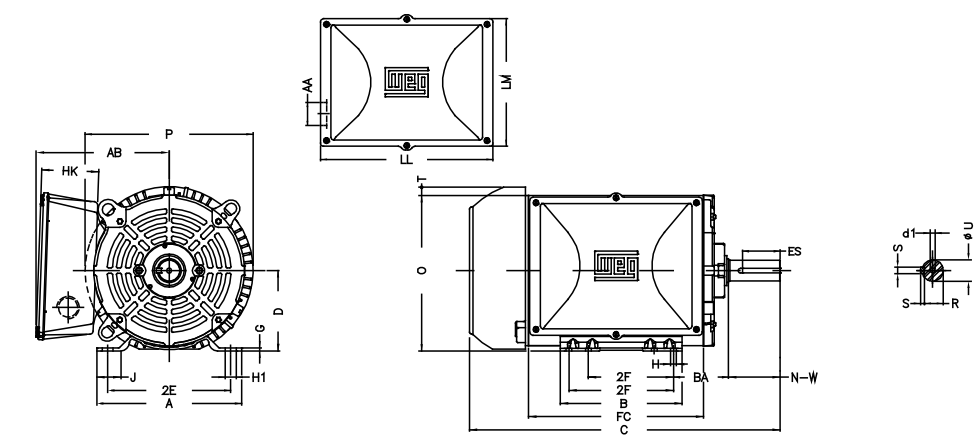

Single Phase - General Purpose - TEFC - Rolled Steel - Standard Efficiency - C-Face

Frame	Type	Flange	Size	AJ	AK	BD	S	T	AH	Angle	BB	BF Number
W56	C	C	FC-149	5.874	4.5	6.47	UNC 3/8”x16-2B	0.157	2.063	45°	0.157	4
48	C	C	FC-95	3.748	3	4.74	UNC 1/4”x20-2B	0.157	1.689	45°	0.157	4
56	C*	C	FC-149	5.874	4.5	6.45	UNC 3/8”x16-2B	0.157	2.062	45°	0.157	4
143/5T	C	C	FC-149	5.874	4.5	6.45	UNC 3/8”x16	0.157	2.132	45°	0.157	4
56H	C	C	FC-149	5.874	4.5	6.45	UNC 3/8”x16-2B	0.157	2.062	45°	0.157	4
182/4T	C	C	FC-184	7.25	8.5	8.846	UNC 1/2”x13	0.25	2.62	45°	0.25	4
213/5T	C	C	FC-184	7.25	8.5	9.401	UNC 1/2”x13	0.25	3.129	45°	0.25	4

Frame W56

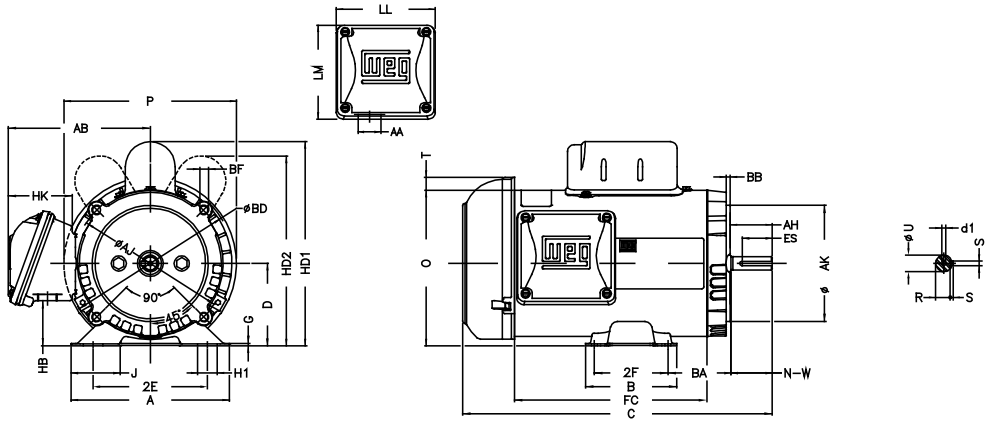

Frame 48

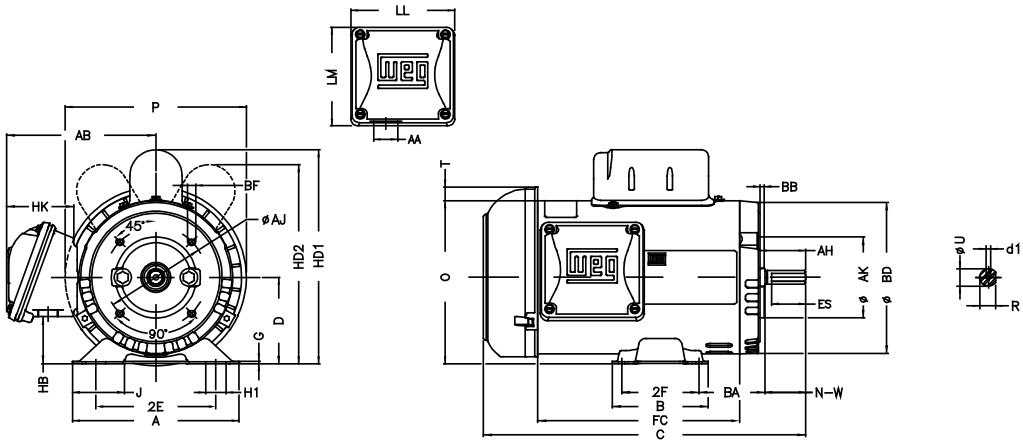

Frame 56

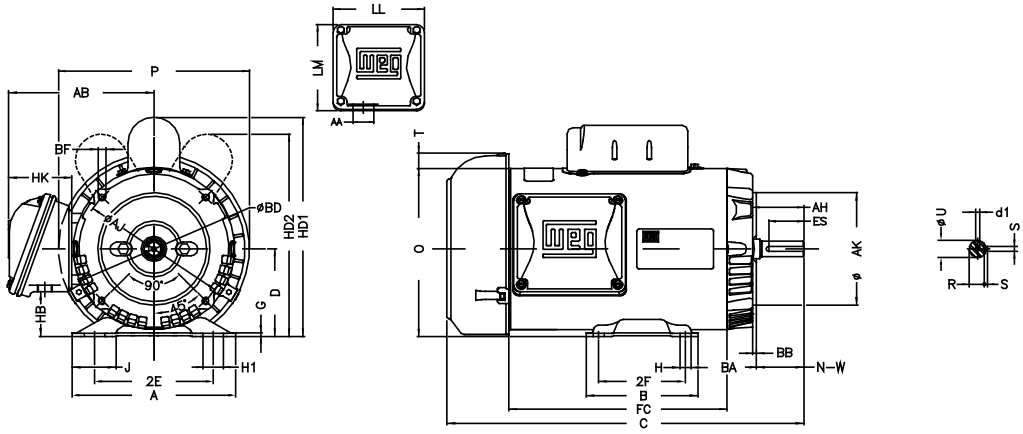

Data subject to change without notice.

Single Phase - General Purpose - TEFC - Rolled Steel - Standard Efficiency - C-Face

Frames 56H - 143/5T

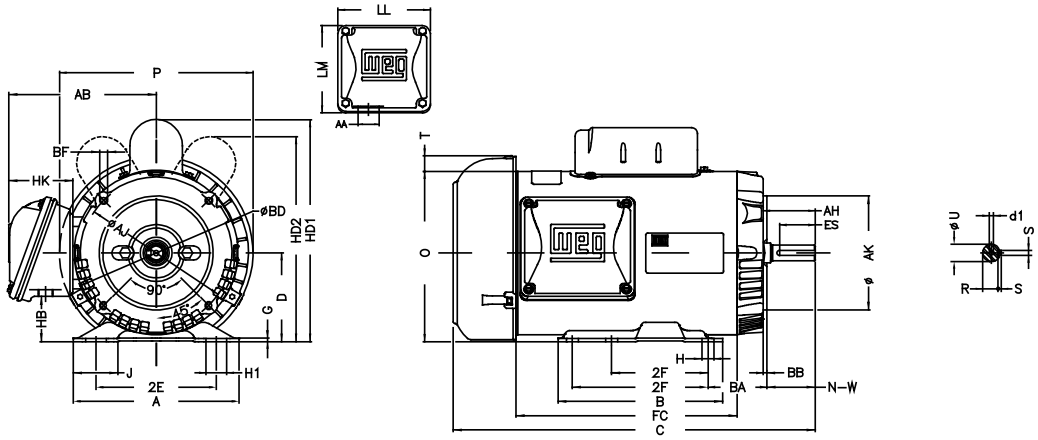

Frame 182/4T

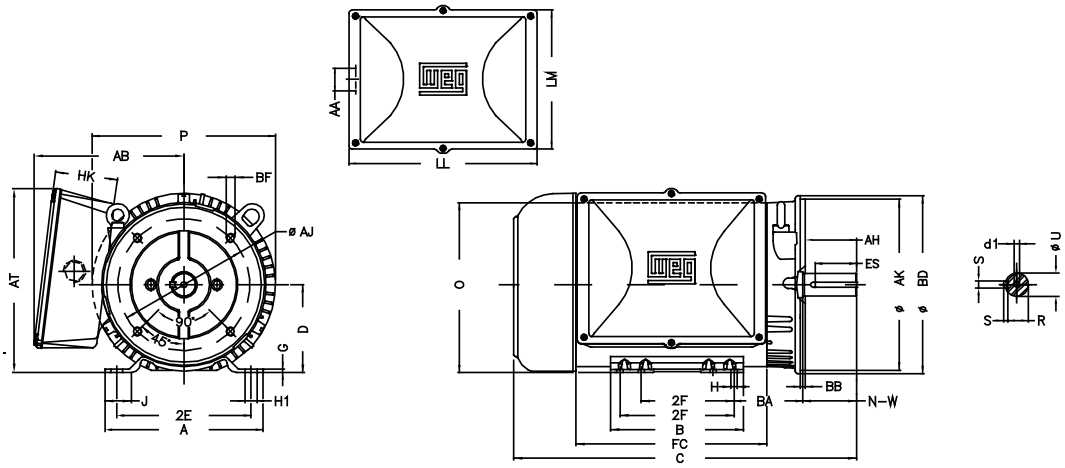

Frame 213/5T

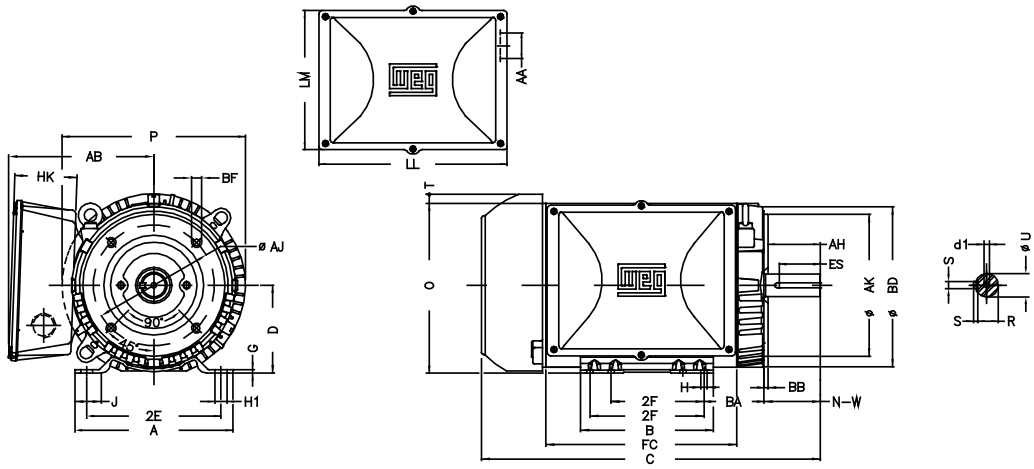

Single Phase - General Purpose - ODP - Rolled Steel - Standard Efficiency

Frame	2E	J	A	P	AB	AH	2F	B	BA	CH	U	N-W	Key Length	R
48	4.236	1.835	6.142	5.709	5.52	1.689	2.748	3.543	2.5	1.22	0.5	1.5	1.26	0.451
W56	4.874	1.62	6.535	5.709	5.52	2.063	3	4.016	2.75	1.22	0.625	1.874	1.417	0.517
56	4.874	1.732	6.535	6.456	3.323	2.062	3	4.016	2.75	1.377	0.625	1.874	1.417	0.517
56H	4.874	1.732	6.535	6.456	5.882	2.062	3.000/5.000	6.496	2.75	1.377	0.625	1.874	1.417	0.517
143/5T	5.5	1.732	6.535	6.467	5.882	2.132	4.000/5.000	6.496	2.25	1.377	0.875	2.25	1.417	0.771
182/4T	7.5	1.299	8.661	8.114	6.696	2.62	4.500/5.500	6.299	2.75	1.377	1.125	2.75	1.969	0.984
213/5T	8.5	1.575	9.449	9.846	7.973	3.129	5.500/7.000	7.953	3.5	1.929	1.375	3.38	2.48	1.203

Frame	D	G	HB	O	HD	HK	Hole H	C	LL	LM	S	AA	T	DE	NDE
48	3	0.075	1.559	5.83	6.354	2.65	0.343	*	3.835	3.697		NPT 1/2”	0.524	6203 ZZ	6202 ZZ
W56	3.5	0.12	2.055	6.33	6.854	2.65	0.343	*	3.835	3.697	0.187	NPT 1/2”	0.524	6203 ZZ	6202 ZZ
56	3.5	0.12	1.784	6.724	6.728	2.629	0.343	*	4.563	4.09	0.187	NPT 1/2”	0.004	6203 ZZ	6202 ZZ
56H	3.5	0.12	1.783	6.724	6.728	2.638	0.343	*	4.543	4.106	0.187	NPT 1/2”	0.004	6204 ZZ	6202 ZZ
143/5T	3.5	0.12	1.783	6.724	6.728	2.638	0.343	*	4.543	4.106	0.187	1.118”	0.004	6205 ZZ	6202 ZZ
182/4T	4.5	0.167	2.784	8.557	8.557	2.629	0.406	*	4.563	4.09	0.25	1.118”	0	6206 ZZ	6205 ZZ
213/5T	5.25	0.167	2.982	10.144	10.173	3.022	0.406	*	5.551	5.25	0.313	1.377”	0.029	6208 ZZ	6206 ZZ

Dimensions change with output speed

Frame 48

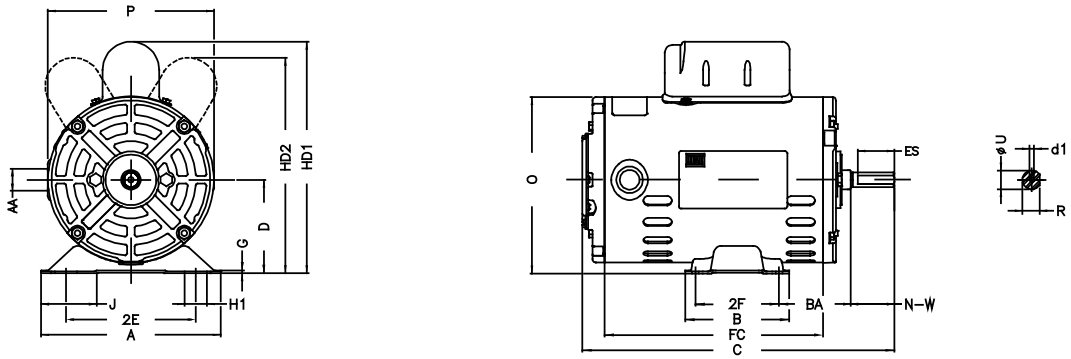

Frame W56

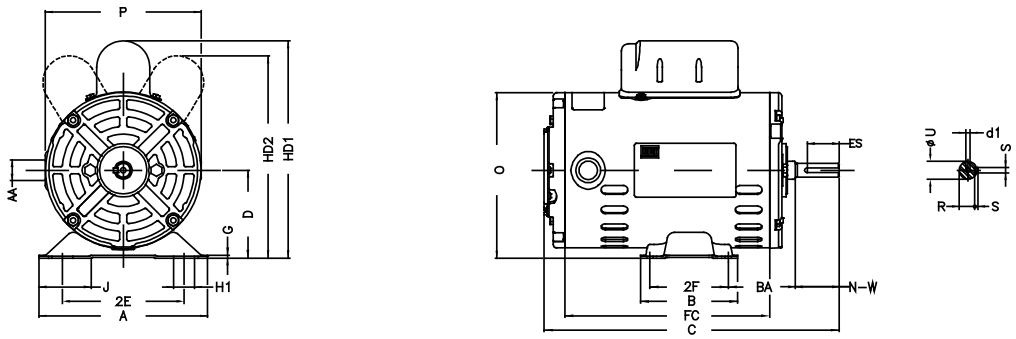

Frame 56

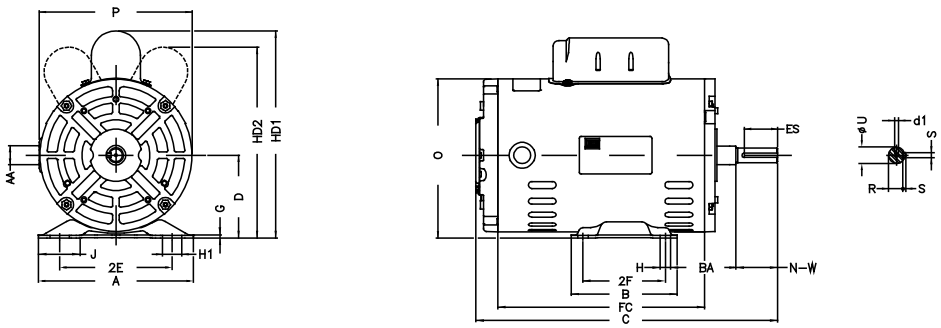

Data subject to change without notice.

Single Phase - General Purpose - ODP - Rolled Steel - Standard Efficiency

Frame 56H

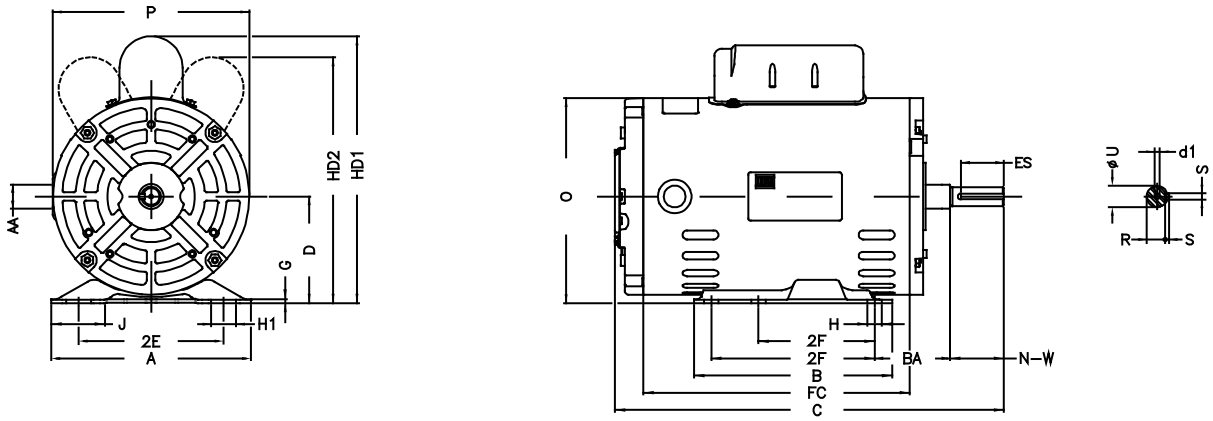

Frame 143/5T

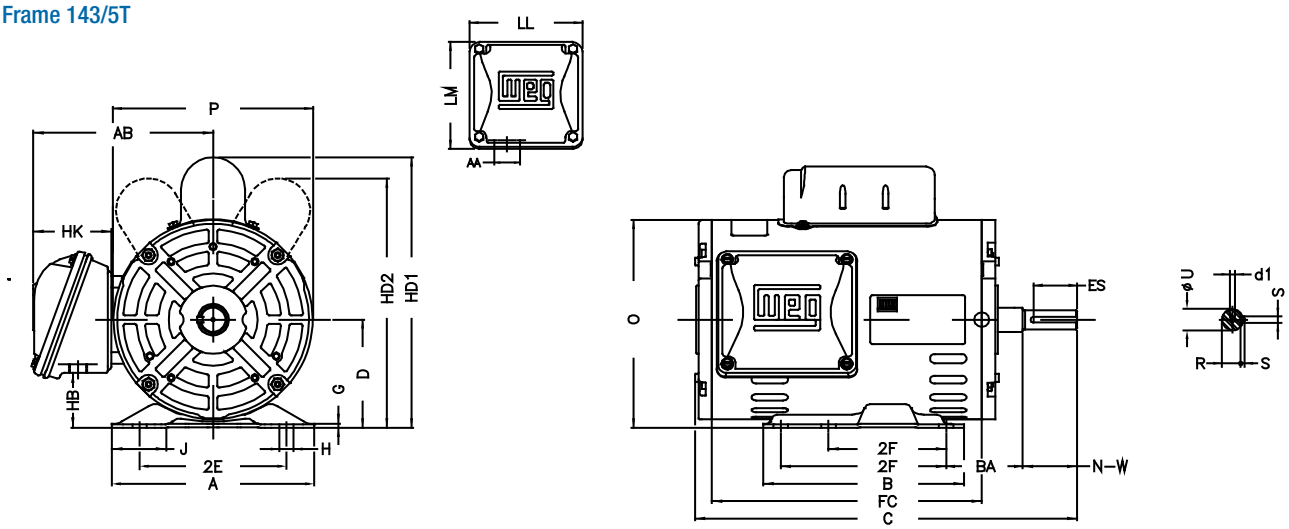

Frame 182/4T - 213/5T

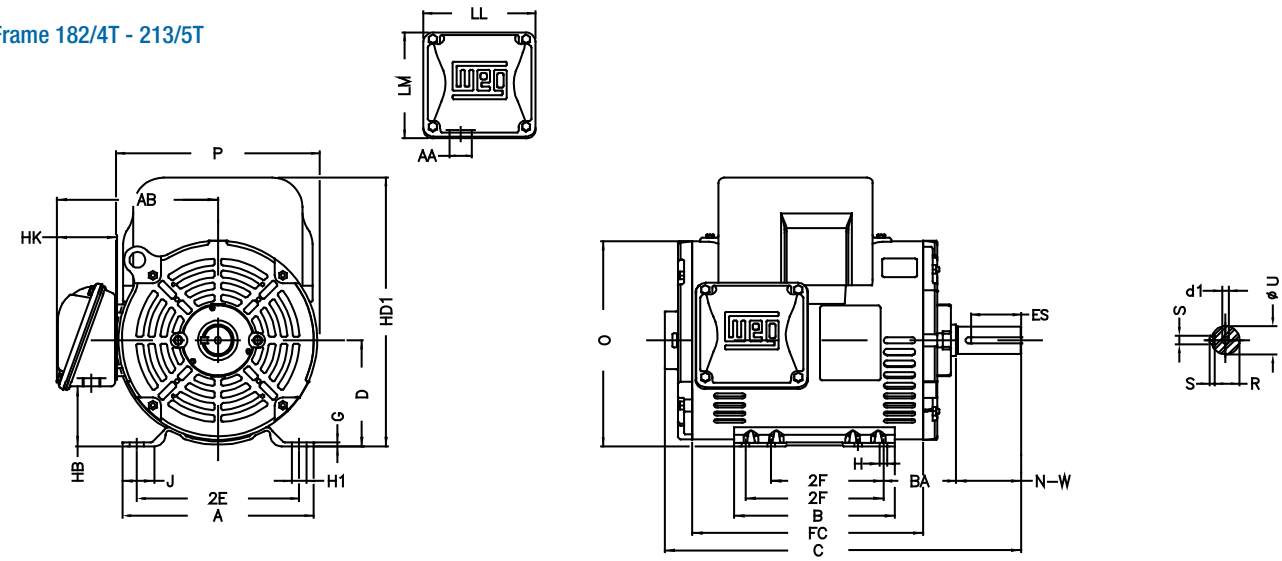

Single Phase - General Purpose - ODP - Rolled Steel - Standard Efficiency - C-Face

Frame	Type	Flange	Size	AJ	AK	BD	S	T	AH	Angle	BF Number
W56	C	C	FC-149	5.874	4.5	6.47	UNC 3/8"x16-2B	0.157	2.063	45°	4
48	C	C	FC-95	3.748	3	4.74	UNC 1/4"x20-2B	0.157	1.689	45°	4
56	C	C	FC-149	5.874	4.5	6.45	UNC 3/8"x16-2B	0.157	2.062	45°	4
143/5T	C	C	FC-149	5.874	4.5	6.45	UNC 3/8"x16	0.157	2.132	45°	4
56H	C	C	FC-149	5.874	4.5	6.45	UNC 3/8"x16-2B	0.157	2.062	45°	4
182/4T	C	C	FC-184	7.25	8.5	8.846	UNC 1/2"x13	0.25	2.62	45°	4
213/5T	C	C	FC-184	7.25	8.5	9.401	UNC 1/2"x13	0.25	3.129	45°	4

Frame 48

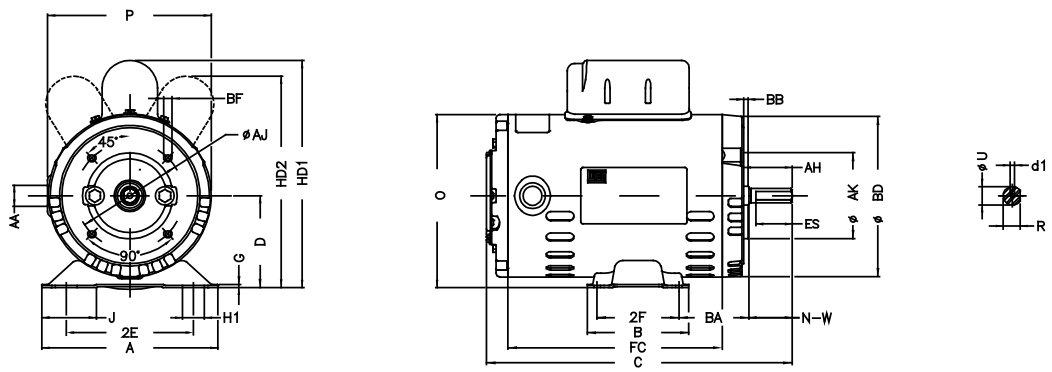

Frame W56

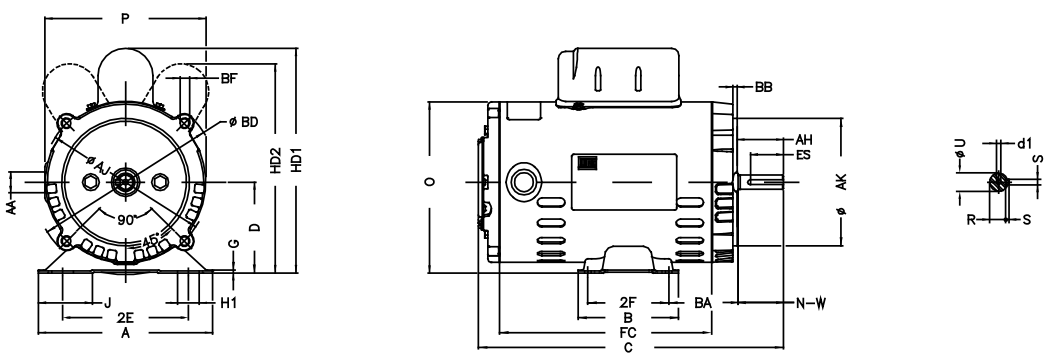

Frame 56

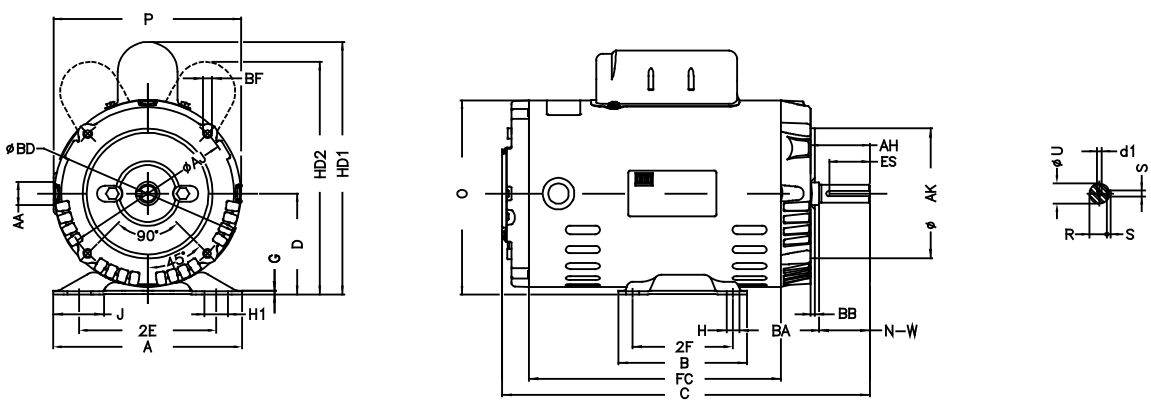

Data subject to change without notice.

Single Phase - General Purpose - ODP - Rolled Steel - Standard Efficiency - C-Face

Frame 56H

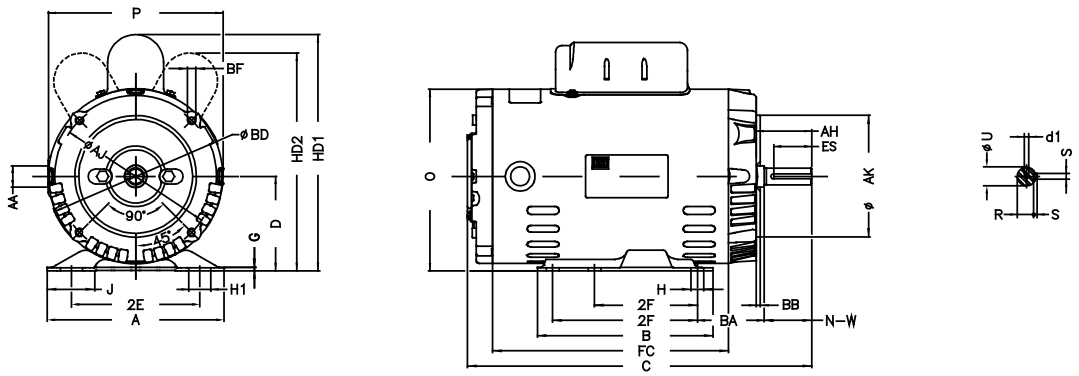

Frame 143/5T

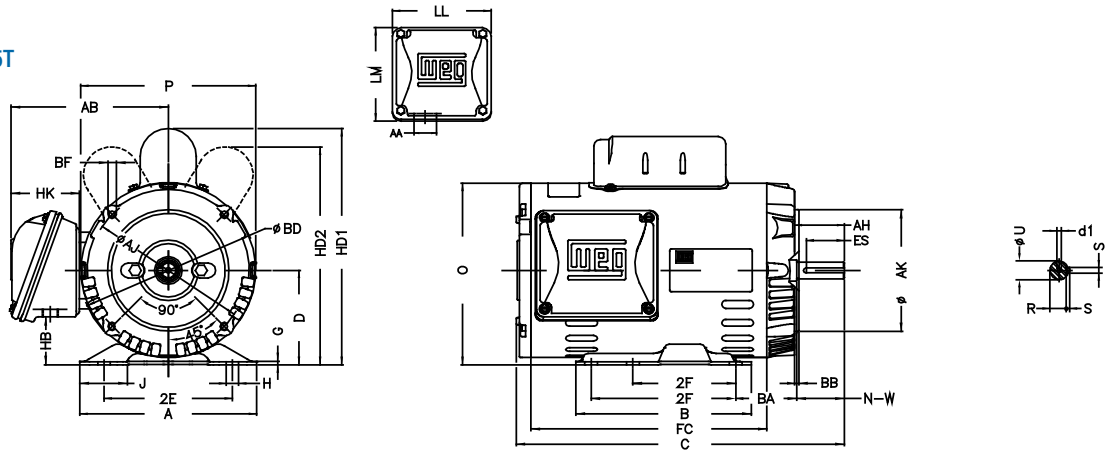

Frame 182/4T - 213/5T

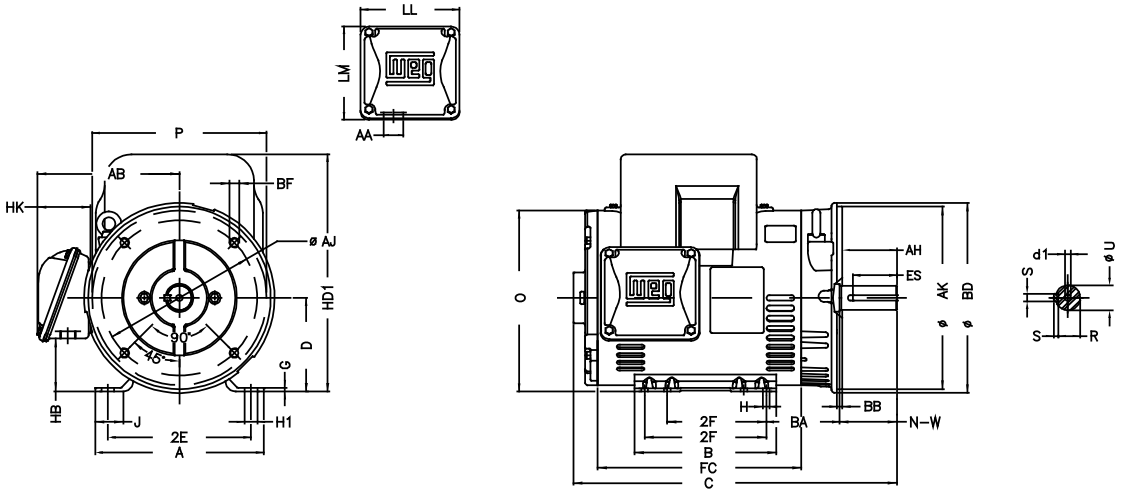

Single Phase - General Purpose - ODP - Rolled Steel - Premium Efficiency

Frame	2E	J	A	P	AB	AH	2F	B	BA	CH	U	N-W	Key Length	R	Depth
48	4.236	1.835	6.142	5.709	5.52	1.689	2.748	3.543	2.5	1.22	0.5	1.5	1.26	0.451	
W56	4.874	1.62	6.535	5.709	5.52	2.063	3	4.016	2.75	1.22	0.625	1.874	1.417	0.517	0.187
56	4.874	1.732	6.535	6.456	3.323	2.062	3	4.016	2.75	1.377	0.625	1.874	1.417	0.517	0.187
56H	4.874	1.732	6.535	6.456	5.882	2.062	3.000/5.000	6.496	2.75	1.377	0.625	1.874	1.417	0.517	0.187
143/5T	5.5	1.732	6.535	6.467	5.882	2.132	4.000/5.000	6.496	2.25	1.377	0.875	2.25	1.417	0.771	0.187

Frame	D	G	HB	O	HD	HK	Hole H	C	LL	LM	S	T	DE	NDE
48	3	0.075	1.559	5.83	6.354	2.65	0.343	*	3.835	3.697		0.524	6203 ZZ	6202 ZZ
W56	3.5	0.12	2.055	6.33	6.854	2.65	0.343	*	3.835	3.697	0.187	0.524	6203 ZZ	6202 ZZ
56	3.5	0.12	1.784	6.724	6.728	2.629	0.343	*	4.563	4.09	0.187	0.004	6203 ZZ	6202 ZZ
56H	3.5	0.12	1.783	6.724	6.728	2.638	0.343	*	4.543	4.106	0.187	0.004	6204 ZZ	6202 ZZ
143/5T	3.5	0.12	1.783	6.724	6.728	2.638	0.343	*	4.543	4.106	0.187	0.004	6205 ZZ	6202 ZZ

Dimensions change with output speed

Frame 48

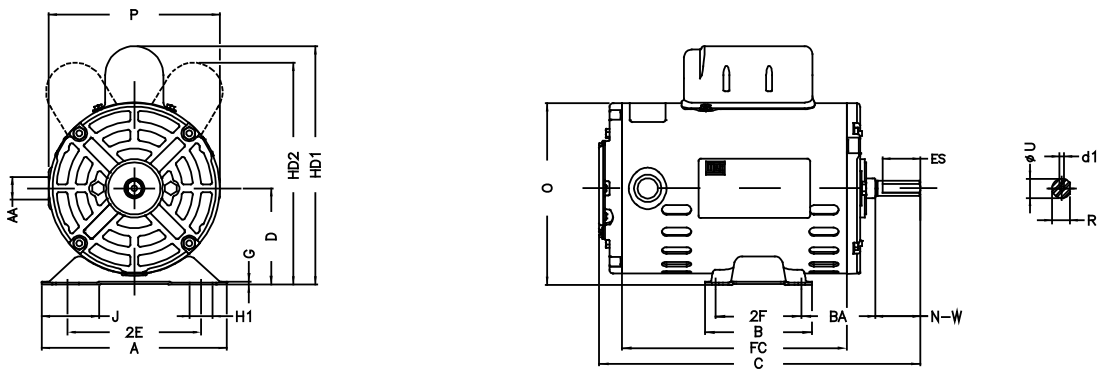

Frame W56

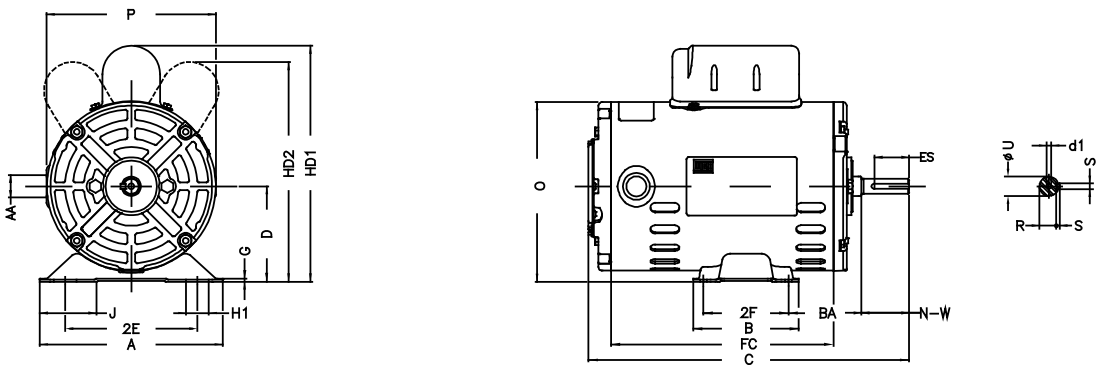

Single Phase - General Purpose - ODP - Rolled Steel - Premium Efficiency

Frame 56

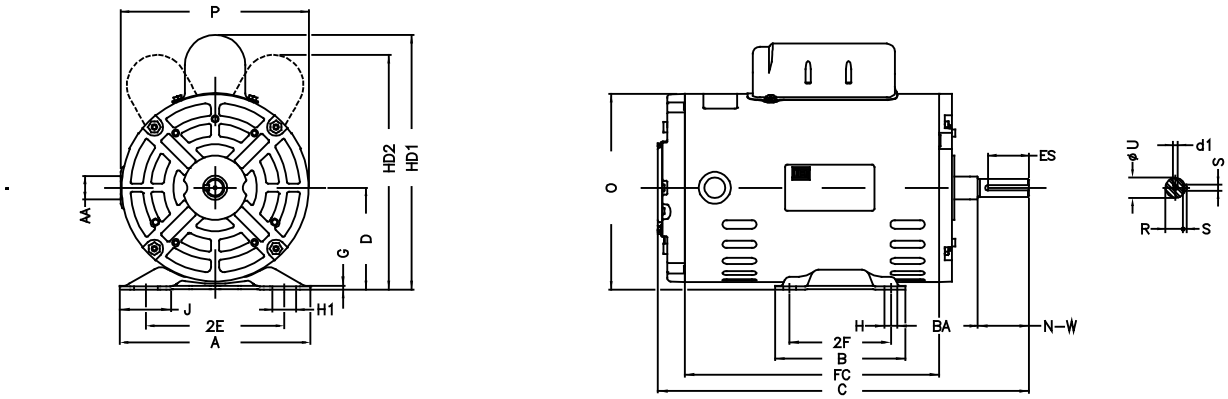

Frame 56H

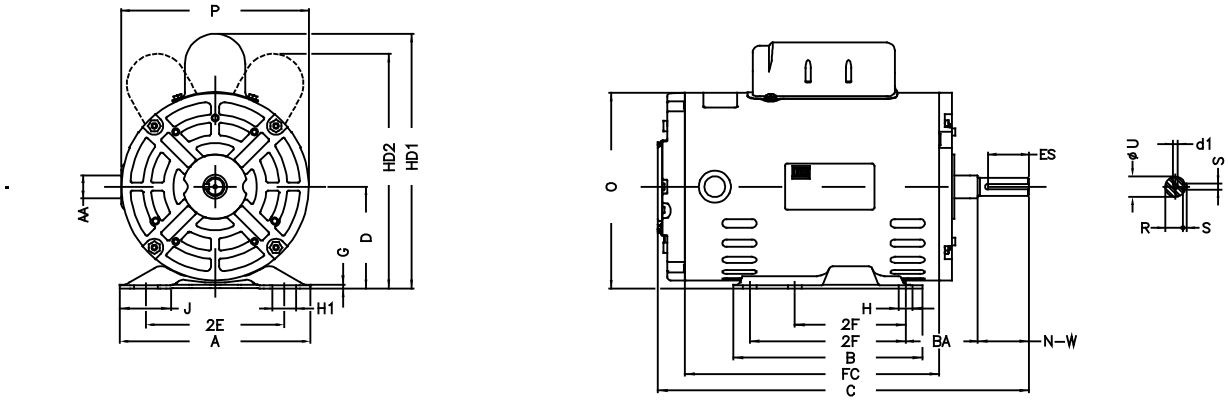

Frame 143/5T

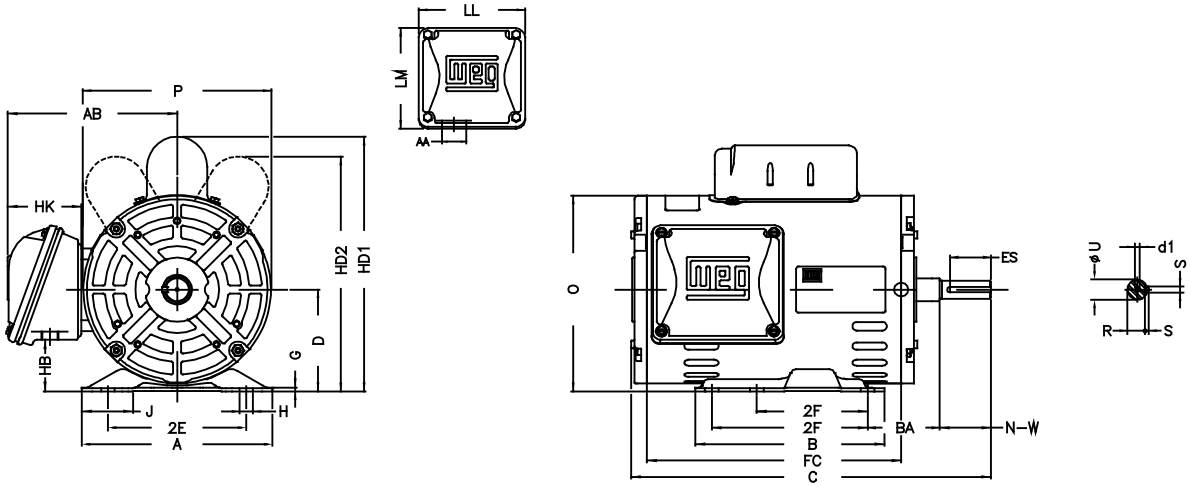

Single Phase - General Purpose - ODP - Rolled Steel - Premium Efficiency - C-Face

Frame	Type	Flange	Size	BB	AJ	AK	BD	S	T	AH	Angle	BF Number
W56	C	C	FC-149	0.157	5.874	4.5	6.47	UNC 3/8"x16-2B	0.157	2.063	45°	4
48	C	C	FC-95	0.157	3.748	3	4.74	UNC 1/4"x20-2B	0.157	1.689	45°	4
56	C	C	FC-149	0.157	5.874	4.5	6.45	UNC 3/8"x16-2B	0.157	2.062	45°	4
143/5T	C	C	FC-149	0.157	5.874	4.5	6.45	UNC 3/8"x16	0.157	2.132	45°	4
56H	C	C	FC-149	0.157	5.874	4.5	6.45	UNC 3/8"x16-2B	0.157	2.062	45°	4

Frame W56

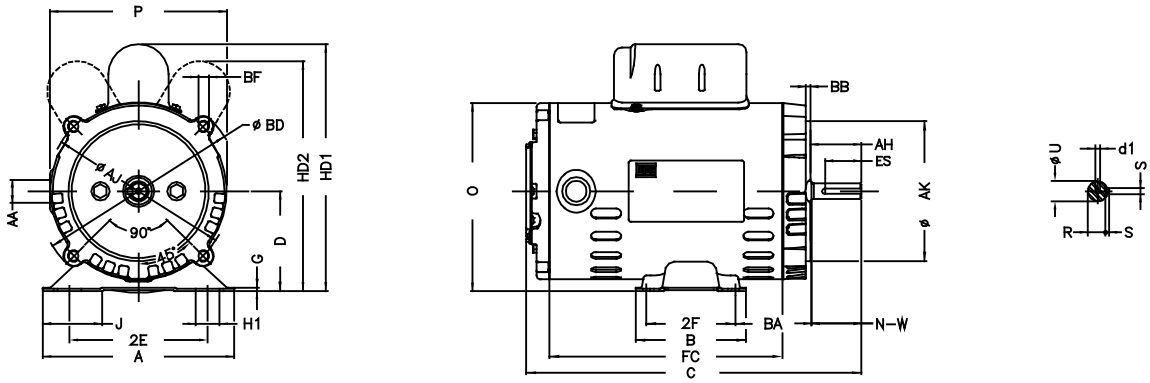

Frame 48

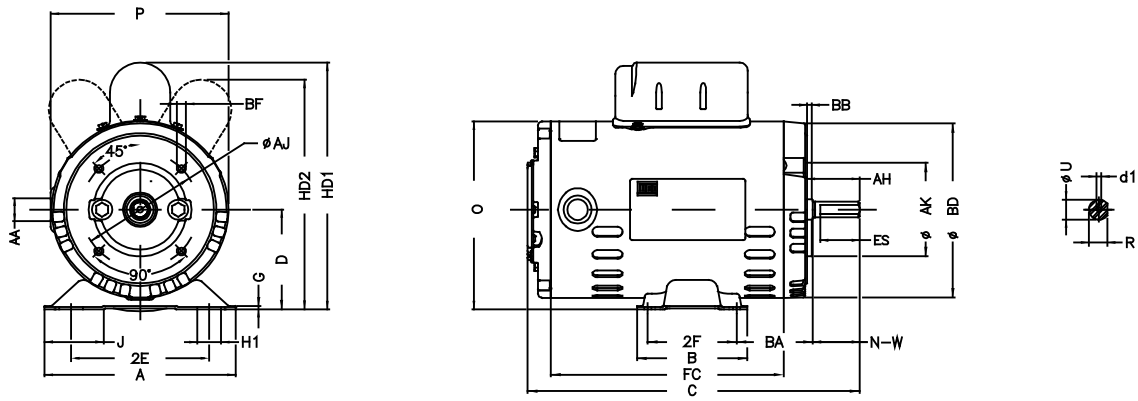

Data subject to change without notice.

Single Phase - General Purpose - ODP - Rolled Steel - Premium Efficiency - C-Face

Frame 56

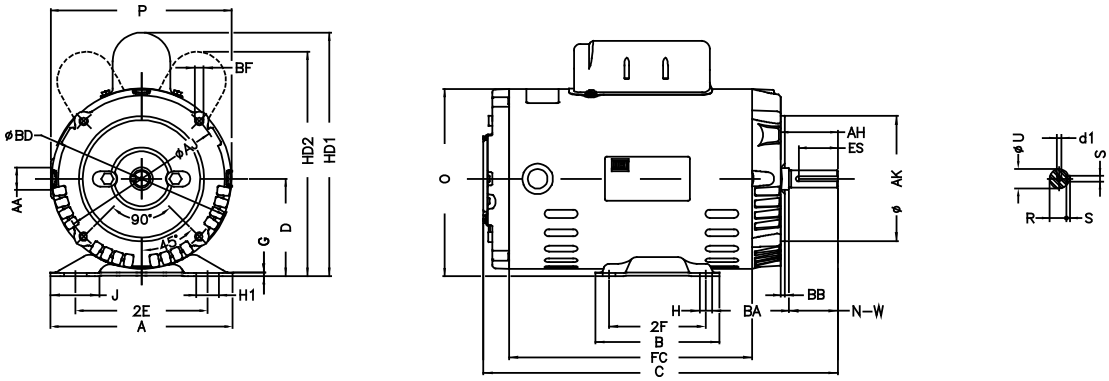

Frame 143/5T

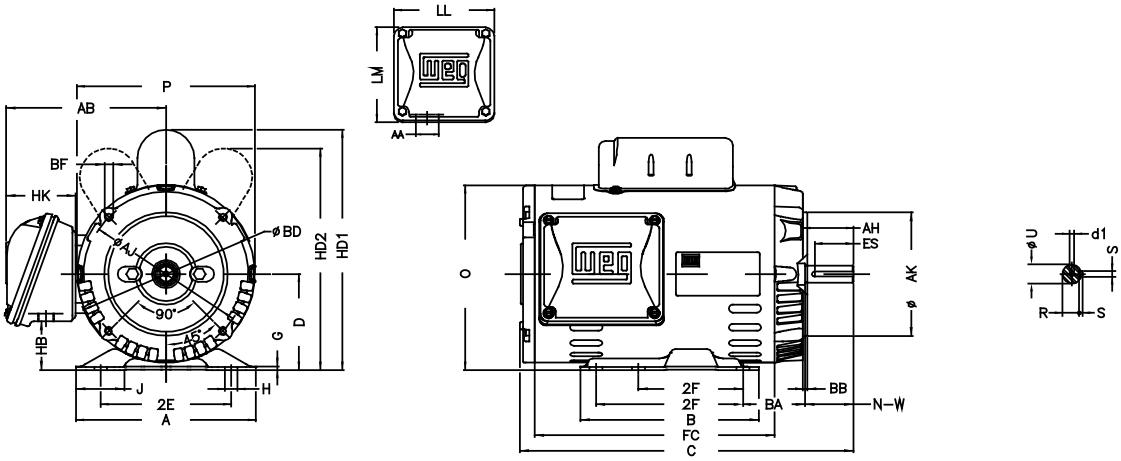

Frame 56H

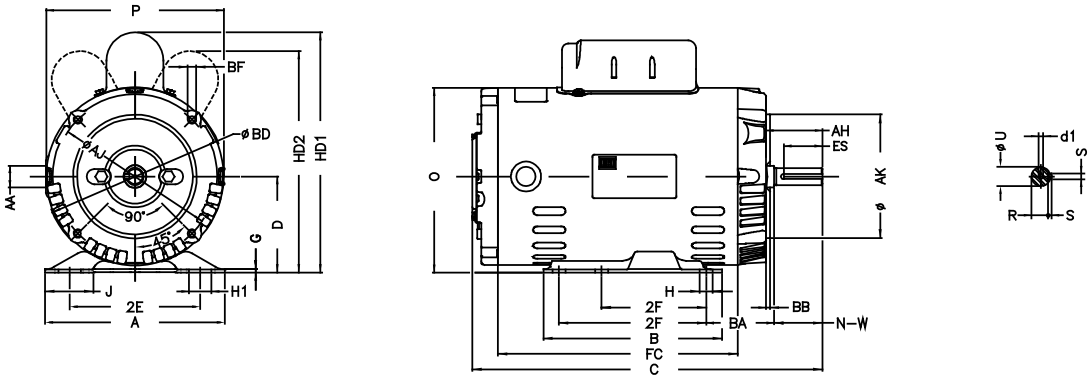

TEFC – W22 NEMA Premium® Efficiency

Frame	Mounting 2E	Mounting 2F	Mounting H	Mounting BA	A	B	C	D	G	J	O	K	P	T	Keyway S	Keyway R	Keyway ES	Shaft Extension N-W	Shaft Extension U
143T	5.500	4.000	0.344	2.250	6.457	5.157	12.346	3.500	0.354	1.437	7.122	-	7.047	-	0.187	0.765	1.575	2.250	0.875
L143T							13.566												
145T		5.000				6.142	13.346												
L145T							14.566												
182T	7.500	4.500	0.406	2.750	8.661	5.945	14.860	4.500	0.394	1.594	9.343	-	8.740	1.772	0.250	0.984	1.969	2.750	1.125
L182T							16.041												
184T		5.500				6.969	15.860												
L184T							17.041												
213T	8.500	5.500		3.500	9.764	7.362	18.021	5.250	0.827	1.988	10.841		10.669		0.313	1.203	2.480	3.375	1.375
L213T							19.527												
215T		7.000				8.858	19.517												
L215T							20.905												
254T	10.000	8.252	0.531	4.250	12.126	10.000	23.213	6.250		2.539	12.598	2.559	12.953	2.087	0.375	1.406	2.756	4.000	1.625
256T		10.000				11.732	24.945												
284TS	11.000	9.500		4.750	13.780	11.575	25.061	7.000	1.023	3.110	14.067	2.874	14.173				2.480	3.250	
284T							26.433								0.500	1.594	3.149	4.622	1.875
286TS		11.000				13.071	26.557								0.375	1.406	2.480	3.250	1.625
286T							27.929								0.500	1.594	3.149	4.622	1.875
324TS	12.500	10.500	0.657	5.250	15.157		28.120	8.000	1.300	3.189	15.953	3.189	15.827	2.441			2.756	3.750	
324T							29.620									1.844	3.937	5.250	2.125
326TS		12.000				14.567	29.616									1.594	2.756	3.750	1.875
326T							31.116									1.844	3.937	5.250	2.125
364/5TS	14.016	11.260/12.244	0.660	5.875	17.165	16.220	32.276	9.000	1.480	3.150	17.957	4.921	17.914	-		1.591	1.968	3.748	1.875
364/5T							34.251								0.625	2.019	4.330	5.874	2.375
404/5TS	15.984	12.244/13.740	0.810	6.625	19.921	18.386	36.732	10.000	1.811	3.937	19.566	5.669	19.134		0.500	1.842	2.756	4.250	2.125
404/5T							39.730								0.750	2.449	5.512	7.250	2.875
444/5TS	18.000	14.500/16.500		7.500	21.929	20.315	41.200	11.000	1.630		22.795	5.866	23.583		0.625	2.021	3.000	4.750	2.375
444/5T							44.950								0.875	2.880	7.087	8.500	3.375
445/7TS		16.500/20.000				23.897	44.951		1.654						0.625	2.021	3.000	4.750	2.375
445/7T							48.701								0.875	2.880	7.087	8.500	3.375
447/9TS		20.000/25.000				31.535	52.588		1.630	4.331		6.692			0.625	2.021	3.000	4.750	2.375
447/9T							56.338								0.875	2.880	7.087	8.500	3.375
L447/9TS		20.000/25.000					53.431			3.937	23.874	8.780	25.866		0.625	2.021	3.000	4.750	2.375
L447/9T							57.181								0.875	2.880	7.087	8.500	3.375
504/5TS	20.000	16.000/18.000	1.250	8.500	24.724	24.449	48.215	12.500	2.146	4.724	25.425	7.228			0.625	2.021	3.000	4.750	2.375
504/5T							54.095								0.875	3.134	8.661	10.630	3.625
586/7TS	23.000	22.000/25.000	1.181	10.000	29.528	29.921	55.027	14.500	2.492	5.512	28.985	9.055	28.977		0.625	2.021	3.000	4.750	2.375
586/7T							61.902								1.000	3.312	8.661	11.625	3.875
588/9TS		28.000/32.000				37.980	62.506					13.030			0.625	2.021	3.000	4.750	2.375
588/9T							69.381								1.000	3.312	8.661	11.625	3.875

Frame	Terminal Box AB	Terminal Box HB	Terminal Box HD	Terminal Box HF	Terminal Box HG	Terminal Box HH	Terminal Box HK	Terminal Box LL	Terminal Box LM	Terminal Box AA	d1	Bearings D.E.	Bearings N.D.E
143T	6.181	1.728	-	3.500	-	4.250	2.638	4.527	4.094	NPT3/4”	A 4	6205 ZZ	6204 ZZ
L143T													
145T						4.750							
L145T													
182T	7.559	2.236		4.500		5.000	3.110	5.512	5.236	NPT1”		6207 ZZ	6206 ZZ
L182T													
184T						5.500							
L184T													
213T	8.583	3.006		5.250		6.250						6308 ZZ	6207 ZZ
L213T													
215T						7.000							
L215T													
254T	10.394	3.061		6.565		8.376	3.937	7.795	7.402	NPT1 1/2”		6309 C3	6209 C3
256T						9.250							
284TS	10.984	3.535		7.000		9.500						6311 C3	6211 C3
284T													
286TS						10.250							
286T													
324TS	12.480	4.811		8.708		10.500	4.645	8.976	8.543	NPT 2”		6312 C3	6212 C3
324T													
326TS						11.250							
326T													
364/5TS	16.378	4.055		-		12.362	6.378	9.646	10.119	NPT 3”	UNC 3/4”-10	6314 C3	6314 C3
364/5T													
404/5TS		5.040				14.213							
404/5T												6316 C3	
444/5TS	18.386	5.394				15.748	5.787	11.811	11.890	2xNPT 3”		6314 C3	
444/5T												6319 C3	6316 C3
445/7TS	20.670	15.078	27.401	25.889	27.007	11.803	6.968	14.646	15.040			6314 C3	6314 C3
445/7T												6319 C3	6316 C3
447/9TS												6314 C3	6314 C3
447/9T												6322 C3	6319 C3
L447/9TS	23.071	15.078	27.401	25.889	27.007	11.500	8.464	15.906	17.244			6314 C3	6314 C3
L447/9T												6322 C3	6319 C3
504/5TS	20.670	15.275	30.305	24.291	29.409	10.394	6.968	14.646	15.040			6314 C3	6314 C3
504/5T												6319 C3	6316 C3
586/7TS	23.977	18.149	35.354	27.559	30.801	13.386	8.464	15.906	17.244			6314 C3	6314 C3
586/7T											UNC 7/8”-9	6322 C3	6319 C3
588/9TS	27.600	6.063	35.346	26.182	33.346		12.519 (side mounted)/ 13.977(top mounted)	17.441	28.740		UNC 3/4”-10	6314 C3	6314 C3
588/9T											UNC 7/8”-9	6322 C3	6319 C3

Note:
182T and 184T motors are not available in F-3 mounting.

Data subject to change without notice.

TEFC – W22 NEMA Premium® Efficiency *continued*

Frames 143T to 215T

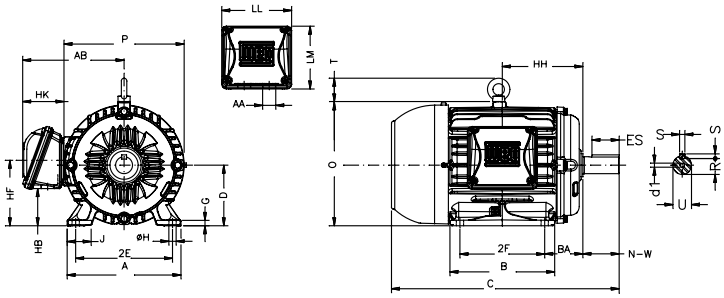

Frames 254T to 326T

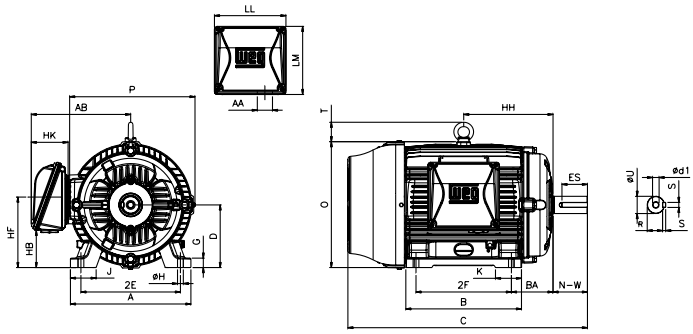

Frames 364 to 444/5T

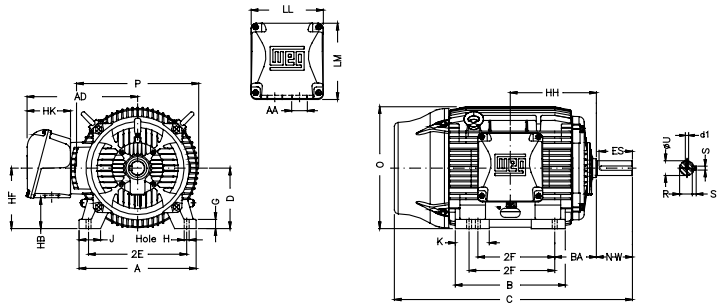

Frames 445/7T to 586/7T

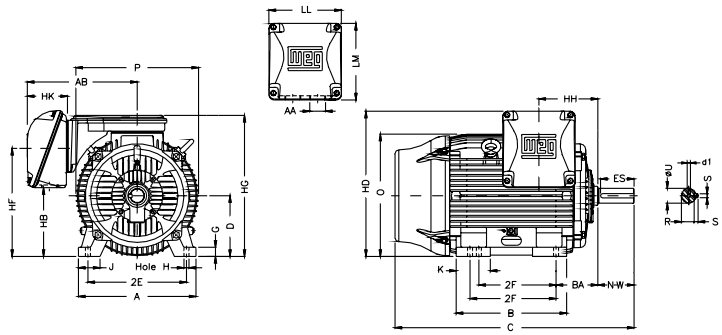

Frame 588/9T

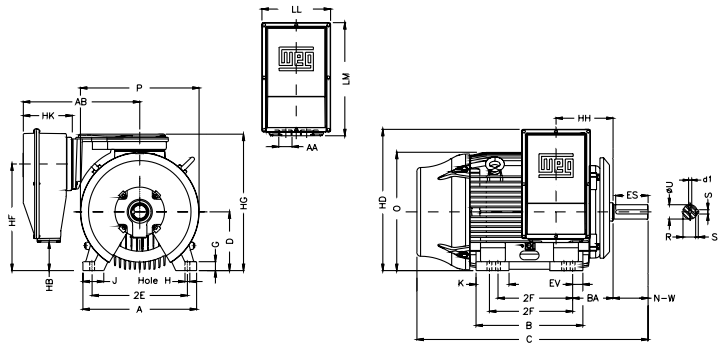

C & D Flanges Dimensions – Valid for Cast Iron TEFC and ODP - C-Flange additional detail

Frame	AJ	AH	BA	BB	BC	BF (holes)	
						Quantity	Thread
143/5	5.875	2.125	2.250	0.157	0.125	4	UNC 3/8"x16
182/4	7.250	2.625	2.750	0.250			UNC 1/2"x13
213/5		3.125	3.500				
254/6		3.750	4.250				
284/6T	9.000	4.375	4.750		0.250		
284/6TS		3.000					
324/6T	11.000	5.000	5.250				UNC 5/8"x11
324/6TS		3.500					
364/5T		5.625	5.875			8	
364/5TS		3.500					
404/5T		7.000	6.625				
404/5TS		4.000					
444/5T	14.000	8.250	7.500				
444/5TS		4.500					
445/7T		8.250					
445/7TS		4.500					
447/9T		8.250					
447/9TS		4.500					
504/5T	14.500	10.375	8.500				
504/5TS		4.500					
586/7T		11.375	10.000				
586/7TS		4.500					
588/9T		11.375					
588/9TS		4.500					

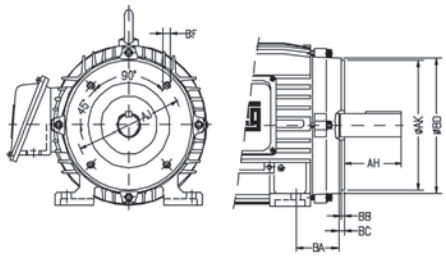

D-Flange additional detail

Frame	AJ	AK	BA	BB	BD	BF (holes)	
						Quantity	Thread
143/5	10.000	9.000	2.250	0.197	11.000	4	0.562
182/4			2.750				
213/5			3.500				
254/6	12.500	11.000	4.250	0.203	14.000		0.828
284/6T			4.750				
284/6TS							
324/6T	16.000	14.000	5.250		18.000		
324/6TS							
364/5T			5.875	0.197	17.710		
364/5TS							
404/5T	20.000	18.000	6.625	0.203	22.000	8	
404/5TS							
444/5T			7.500		21.650		
444/5TS							
445/7T							
445/7TS							
447/9T							
447/9TS							
504/5T	22.000		8.500	0.250	24.800		
504/5TS							
586/7T	30.000	30.000	10.000		32.000		
586/7TS							
588/9T							
588/9TS							

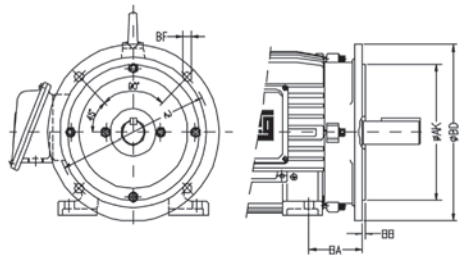

Data subject to change without notice.

Rolled Steel - General Purpose - Three Phase - TEFC

Frame	P	AB	HK	HB	J	2E	A	H1	D	G	LL	LM
143/5T	7.638	5.882	2.638	1.783	1.732	5.500	6.535	-	3.500	0.120	4.543	4.106
182/4T	9.435	6.696	2.629	2.784	1.299	7.500	8.661	-	4.500	0.167	4.563	4.090
213/5T	10.965	7.973	3.022	2.982	1.575	8.500	9.449	-	5.250	0.167	5.551	5.250
254/6T	13.180	9.448	3.645	3.631	1.693	10.000	11.417	-	6.250	0.187	6.299	6.017

Frame	AA	O	T	Hole H	2F	B	BA	N-W	ES	U	d1	S	R
143/5T	1.118”	6.724	0.603	0.343	4.000/5.000	6.496	2.250	2.250	1.417	0.875	A 3.15	0.187	0.771
182/4T	1.118”	8.557	0.661	0.406	4.500/5.500	6.299	2.750	2.750	1.969	1.125	A 3.15	0.250	0.984
213/5T	1.377”	10.144	0.761	0.406	5.500/7.000	7.953	3.500	3.380	2.480	1.375	A 4	0.313	1.203
254/6T	1.732”	12.010	0.83	0.530	8.252/10.000	11.417	4.250	4.000	2.756	1.625	A 4	0.375	1.416

Frames 143

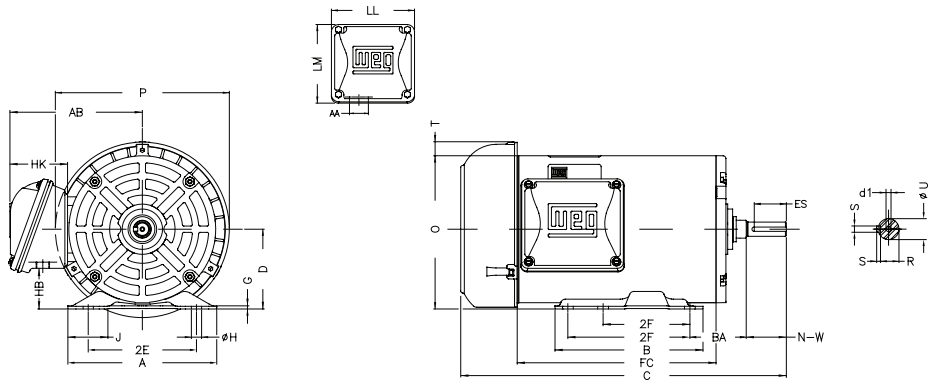

Frames 182

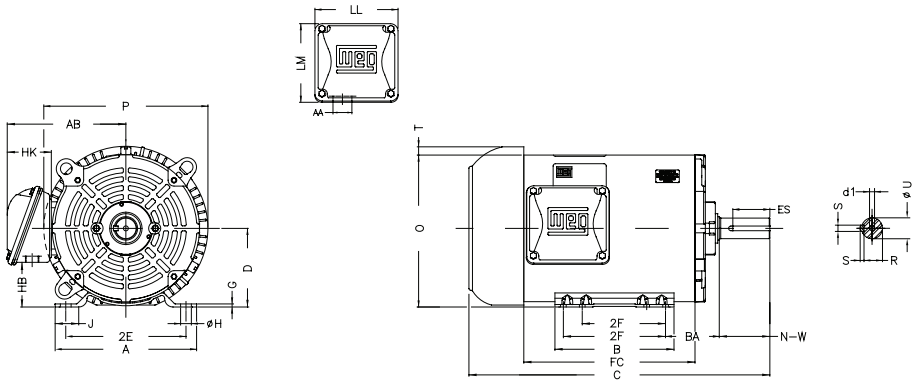

Frame 213 to 256

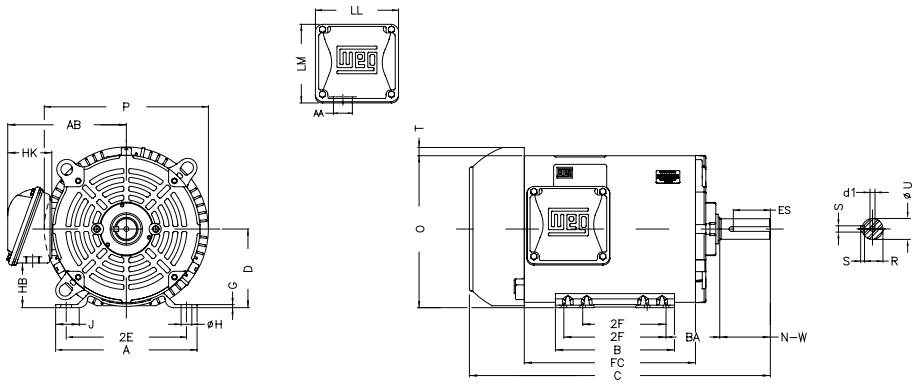

Rolled Steel - General Purpose - Three Phase - TEFC - *continued*

Dimensions for C-Face motors

Frame	Size	AJ	AK	BD	BF	BB	AH	Angle	BF Number
143/5T	FC-149	5.874	4.500	6.449	UNC 3/8”x16	0.157	2.132	45°	4
182/4T	FC-184	7.250	8.500	8.846	UNC 1/2”x13	0.250	2.620	45°	4
213/5T	FC-184	7.250	8.500	9.401	UNC 1/2”x13	0.250	3.129	45°	4
254/6T	FC-184	7.250	8.500	11.084	UNC 1/2”x13	0.250	3.750	45°	4

Frames 143

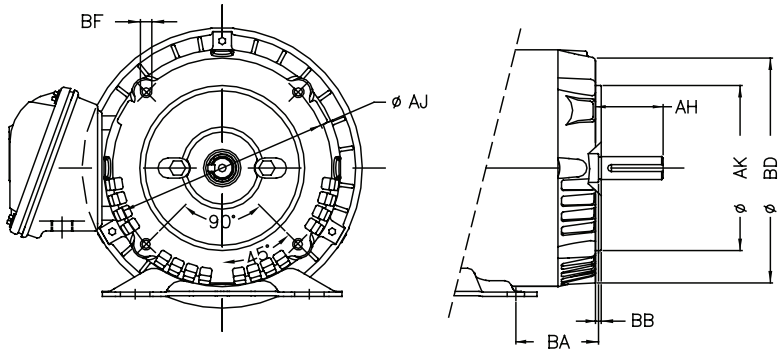

Frames 182

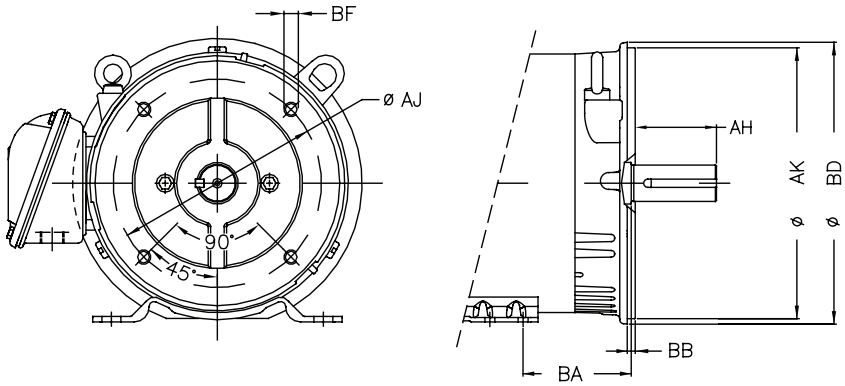

Frame 213 to 254

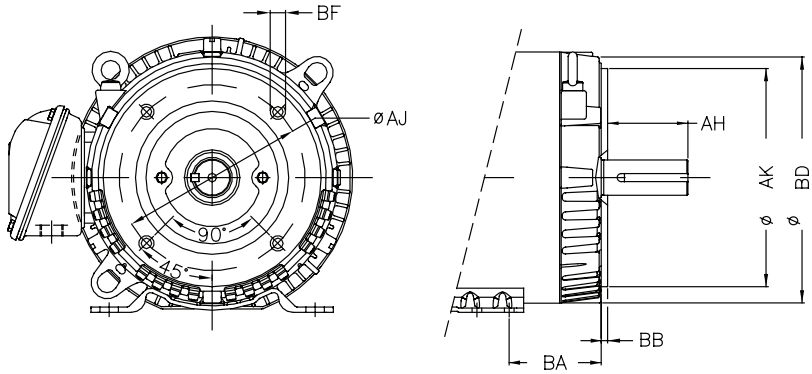

Data subject to change without notice.

Rolled Steel - General Purpose - Three Phase - ODP

Frame	A	AA	AB	P	2E	J	HB	HK	H1	G	D	HD1
143/5T	6.535	1.118”	5.882	6.467	5.500	1.732	1.783	2.638	-	0.120	3.500	8.622
182/4T	8.661	1.118”	6.696	8.114	7.500	1.299	2.784	2.629	-	0.167	4.500	11.441
213/5T	9.449	1.377”	7.973	9.846	8.500	1.575	2.982	3.022	-	0.167	5.250	13.764

Frame	HD2	LL	LM	O	2F	H	B	BA	N-W	ES	U	d1	R	S
143/5T	8.150	4.543	4.106	6.724	4.000/5.000	0.343	6.496	2.250	2.250	1.417	0.875	A 3.15	0.771	0.187
182/4T	-	4.563	4.090	8.557	4.500/5.500	0.406	6.299	2.750	2.750	1.969	1.125	A 3.15	0.984	0.250
213/5T	-	5.551	5.250	10.144	5.500/7.000	0.406	7.953	3.500	3.380	2.480	1.375	A 4	1.203	0.313

Frames 143

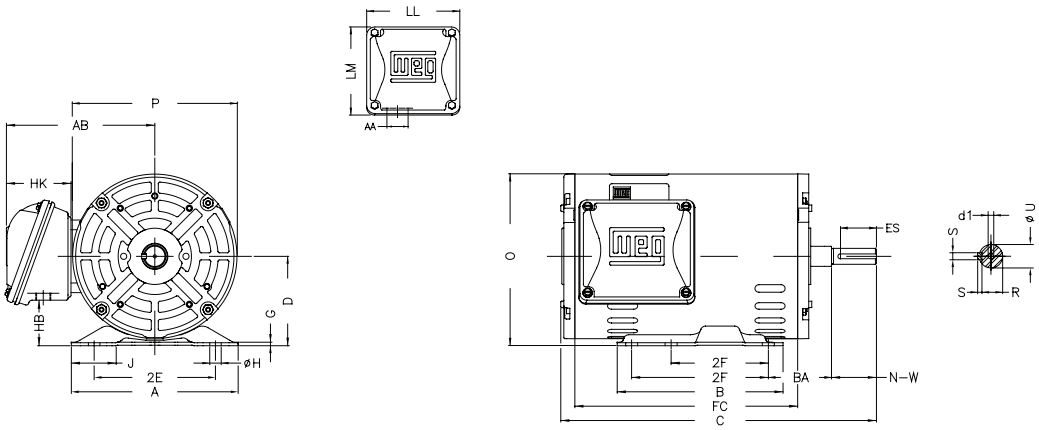

Frames 182

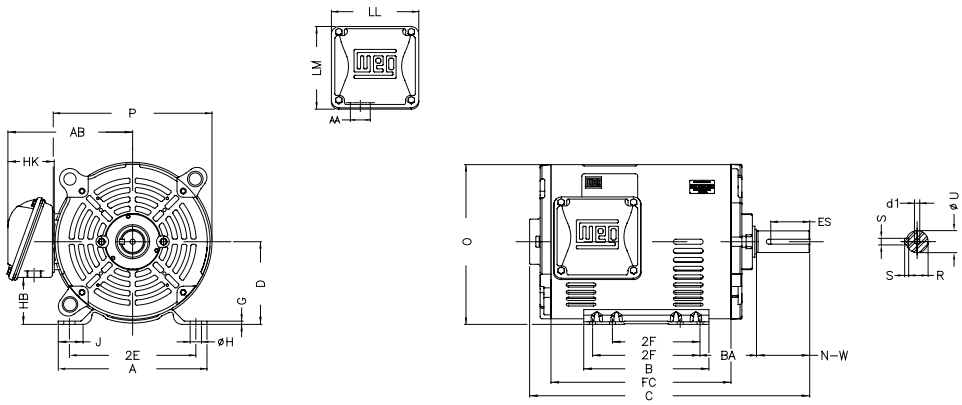

Frame 213 to 256

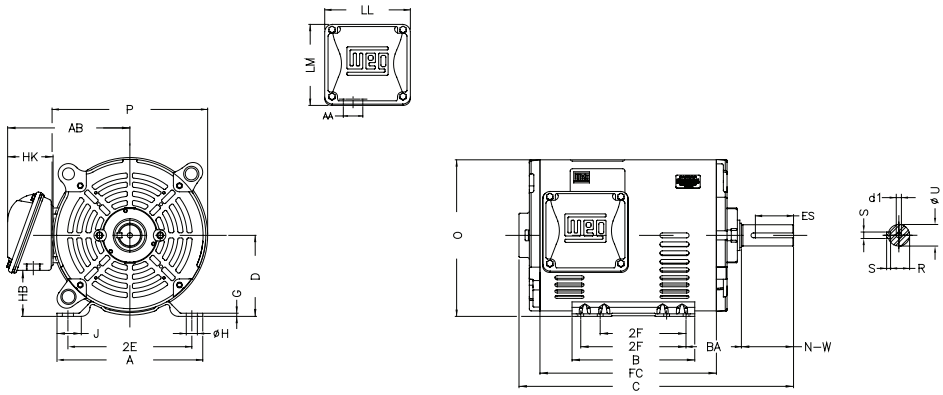

ODP – Cast Iron - Three Phase - General Purpose

Frame	2E	J	A	P	AB	2F	K	B	BA	U	d1	N-W
254T	10.000	2.520	12.130	11.812	10.079	8.250	2.560	10.100	4.250	1.625	A4	4.000
256T	10.000	2.520	12.130	11.812	10.079	10.000	2.560	11.732	4.250	1.625	A4	4.000
284TS	11.000	3.150	13.780	13.700	10.886	9.500	2.960	11.574	4.750	1.625	A4	3.250
284T	11.000	3.150	13.780	13.700	10.886	9.500	2.960	11.574	4.750	1.625	A4	4.622
286TS	11.000	3.150	13.780	13.700	10.886	11.000	2.960	13.070	4.750	1.625	A4	3.250
286T	11.000	3.150	13.780	13.700	10.886	11.000	2.960	13.070	4.750	1.875	A4	4.622
324TS	12.500	3.230	15.160	15.118	11.496	10.500	3.350	13.070	5.250	1.875	A4	3.750
324T	12.500	3.230	15.160	15.118	11.496	10.500	3.350	13.070	5.250	2.125	A4	5.250
326TS	12.500	3.230	15.160	15.118	11.496	12.000	3.350	14.566	5.250	1.875	A4	3.750
326T	12.500	3.230	15.160	15.118	11.496	12.000	3.350	14.566	5.250	2.125	A4	5.250
364TS	14.000	3.150	17.170	17.874	16.378	11.250/12.250	4.140	15.400	5.875	1.875	DUNC 3/4”-10	3.748
364T	14.000	3.150	17.170	17.874	16.378	11.250/12.250	4.140	15.400	5.875	2.375	DUNC 3/4”-10	5.874
365TS	14.000	3.150	17.170	17.874	16.378	11.250/12.250	4.140	15.400	5.875	1.875	DUNC 3/4”-10	3.748
365T	14.000	3.150	17.170	17.874	16.378	11.250/12.250	4.140	15.400	5.875	2.375	DUNC 3/4”-10	5.874
364/5TS	14.000	3.150	17.170	17.874	16.378	11.250/12.250	4.140	15.400	5.875	1.875	DUNC 3/4”-10	3.748
364/5T	14.000	3.150	17.170	17.874	16.378	11.250/12.250	4.140	15.400	5.875	2.375	DUNC 3/4”-10	5.874
404TS	16.000	3.950	19.950	17.874	16.378	11.250/12.250	5.440	17.700	6.625	2.125	DUNC 3/4”-10	4.250
404T	16.000	3.950	19.950	17.874	16.378	12.250/13.750	5.440	17.700	6.625	2.875	DUNC 3/4”-10	7.250
404/5TS	16.000	3.950	19.950	17.874	16.378	12.250/13.750	5.440	17.700	6.625	2.125	DUNC 3/4”-10	4.250
404/5T	16.000	3.950	19.950	17.874	16.378	12.250/13.750	5.440	17.700	6.625	2.875	DUNC 3/4”-10	7.250
405TS	16.000	3.950	19.950	17.874	16.378	12.250/13.750	5.440	17.700	6.625	2.125	DUNC 3/4”-10	4.250
405T	16.000	3.950	19.950	17.874	16.378	12.250/13.750	5.440	17.700	6.625	2.875	DUNC 3/4”-10	7.250
444TS	18.000	3.937	21.929	22.125	20.236	12.250/13.750	5.590	20.078	7.500	2.375	DUNC 3/4”-10	4.750
444T	18.000	3.937	21.929	22.125	20.236	12.250/13.750	5.590	20.078	7.500	3.375	DUNC 3/4”-10	8.500
445TS	18.000	3.937	21.929	22.125	20.236	14.500/16.500	5.590	20.078	7.500	2.375	DUNC 3/4”-10	4.750
445T	18.000	3.937	21.929	22.125	20.236	14.500/16.500	5.590	20.078	7.500	3.375	DUNC 3/4”-10	8.500
444/5T	18.000	3.937	21.929	22.125	20.236	14.500/16.500	5.590	20.078	7.500	3.375	DUNC 3/4”-10	8.500

Frame	ES	S	R	D	G	O	H	C	T	LL	LM	AA	Bearing	
													DE	N-DE
254T	2.756	0.375	1.416	6.250	0.787	12.204	0.531	20.669	2.165	6.300	6.693	NPT 1 1/2”	6309 Z-C3	6209 Z-C3
256T	2.756	0.375	1.416	6.250	0.787	12.204	0.531	22.401	2.165	6.300	6.693	NPT 1 1/2”	6309 Z-C3	6209 Z-C3
284TS	2.480	0.375	1.416	7.000	1.102	13.858	0.531	22.000	2.165	6.300	6.693	NPT 1 1/2”	6311 Z-C3	6211 Z-C3
284T	3.149	0.500	1.594	7.000	1.102	13.858	0.531	23.386	2.165	6.300	6.693	NPT 1 1/2”	6311 Z-C3	6211 Z-C3
286TS	2.480	0.375	1.416	7.000	1.102	13.858	0.531	23.504	2.165	6.300	6.693	NPT 1 1/2”	6311 Z-C3	6211 Z-C3
286T	3.149	0.500	1.594	7.000	1.102	13.858	0.531	24.882	2.165	6.300	6.693	NPT 1 1/2”	6311 Z-C3	6211 Z-C3
324TS	2.756	0.500	1.594	8.000	1.299	15.551	0.656	24.685	2.559	7.874	8.268	NPT 2”	6312 Z-C3	6212 Z-C3
324T	3.937	0.500	1.844	8.000	1.299	15.551	0.656	26.181	2.559	7.874	8.268	NPT 2”	6312 Z-C3	6212 Z-C3
326TS	2.756	0.500	1.594	8.000	1.299	15.551	0.656	26.181	2.559	7.874	8.268	NPT 2”	6312 Z-C3	6212 Z-C3
326T	3.937	0.500	1.844	8.000	1.299	15.551	0.656	27.667	2.559	7.874	8.268	NPT 2”	6312 Z-C3	6212 Z-C3
364TS	1.968	0.500	1.591	9.000	1.480	18.425	0.657	27.638	2.795	9.646	10.00	NPT 3”	6314 C3	6314 C3
364T	4.330	0.625	2.019	9.000	1.480	18.425	0.657	29.764	2.795	9.646	10.00	NPT 3”	6314 C3	6314 C3
365TS	1.968	0.500	1.591	9.000	1.480	18.425	0.657	27.638	2.795	9.646	10.00	NPT 3”	6314 C3	6314 C3
365T	4.330	0.625	2.019	9.000	1.480	18.425	0.657	29.764	2.795	9.646	10.00	NPT 3”	6314 C3	6314 C3
364/5TS	1.968	0.500	1.591	9.000	1.480	18.425	0.657	27.638	2.795	9.646	10.00	NPT 3”	6314 C3	6314 C3
364/5T	4.330	0.625	2.019	9.000	1.480	18.425	0.657	29.764	2.795	9.646	10.00	NPT 3”	6314 C3	6314 C3
404TS	2.756	0.500	1.842	10.000	1.968	19.409	0.807	31.141	2.8	9.646	10.00	NPT 3”	6314 C3	6314 C3
404T	5.512	0.750	2.449	10.000	1.968	19.409	0.807	34.133	2.8	9.646	10.00	NPT 3”	6316 C3	6314 C3
404/5TS	2.756	0.500	1.842	10.000	1.968	19.409	0.807	31.141	2.8	9.646	10.00	NPT 3”	6314 C3	6314 C3
404/5T	5.512	0.750	2.449	10.000	1.968	19.409	0.807	34.133	2.8	9.646	10.00	NPT 3”	6316 C3	6314 C3
405TS	2.756	0.500	1.842	10.000	1.968	19.409	0.807	31.141	2.8	9.646	10.00	NPT 3”	6314 C3	6314 C3
405T	5.512	0.750	2.449	10.000	1.968	19.409	0.807	34.133	2.8	9.646	10.00	NPT 3”	6316 C3	6314 C3
444TS	3.000	0.625	2.021	11.000	1.811	22.440	0.807	36.062	3.544	14.291	14.921	2XNPT 3”	6314 C3	6314 C3
444T	7.087	0.875	2.880	11.000	1.811	22.440	0.807	39.803	3.544	14.291	14.921	2XNPT 3”	6319 C3	6316 C3
445TS	3.000	0.625	2.021	11.000	1.811	22.440	0.807	36.062	3.544	14.291	14.921	2XNPT 3”	6314 C3	6314 C3
445T	7.087	0.875	2.880	11.000	1.811	22.440	0.807	39.803	3.544	14.291	14.921	2XNPT 3”	6319 C3	6316 C3
444/5T	7.087	0.875	2.880	11.000	1.811	22.440	0.807	39.803	3.544	14.291	14.921	2XNPT 3”	6319 C3	6316 C3

Data subject to change without notice.

ODP – Cast Iron - Three Phase - General Purpose- *continued*

Frame 254T to 447/9TS

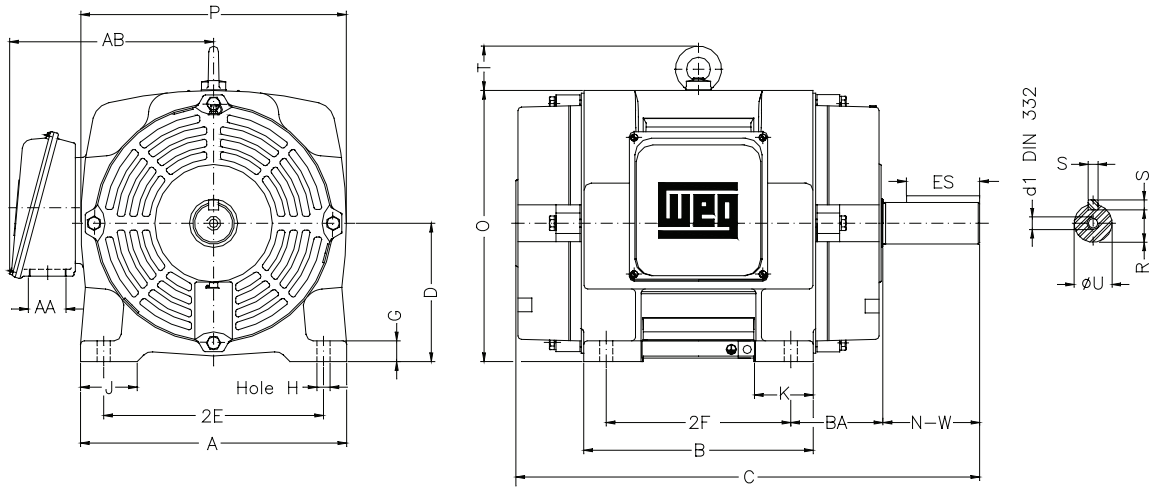

Frame 5010/11T and 5010/11TS

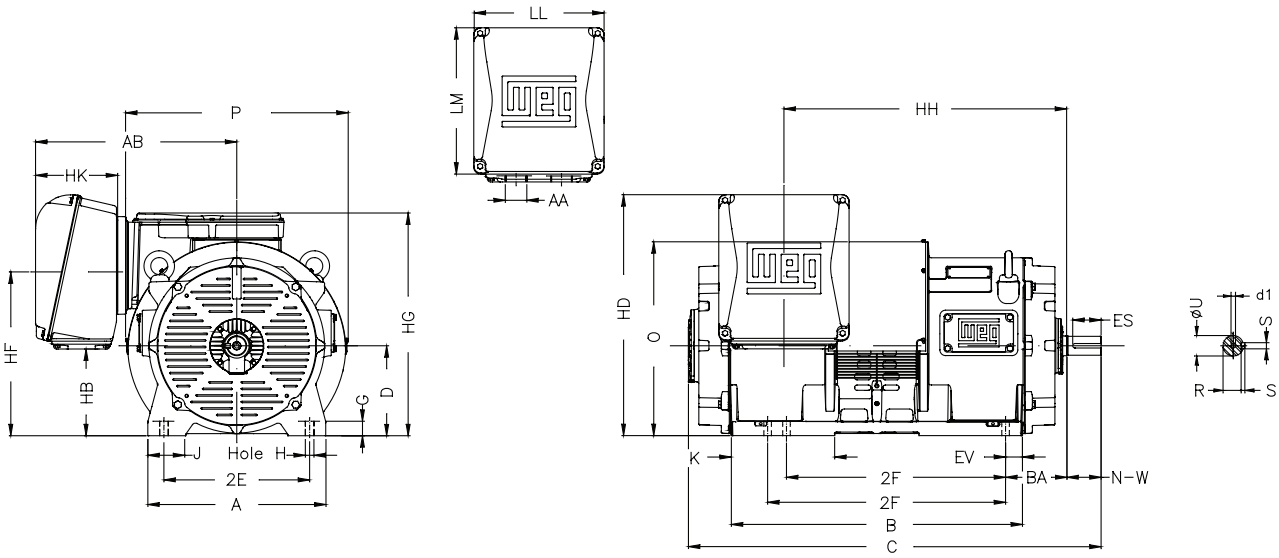

Explosion Proof - Three Phase

Frame	2E	2F	A	AA	AB	B	BA	C	D	G	Hole H	J
143T	5.500	4.000	6.457	NPT 3/4"	6.811	5.157	2.250	12.760	3.500	0.429	0.344	1.496
145T		5.000				6.142		13.752				
182T	7.500	4.500	8.661		8.240	5.945	2.750	14.862	4.500	0.787	0.406	1.890
184T		5.500				6.969		15.862				
213T	8.500		9.764	NPT 1"	9.252	7.402	3.500	17.952	5.250	0.827		2.008
215T		7.000				8.898		19.450				
254T	10.000	8.252	12.126	NPT 1 1/2"	11.063	10.000	4.250	23.175	6.250	0.817	0.531	2.520
256T		10.000				11.732		24.923				
284T	11.000	9.500	13.780		11.850	11.575	4.750	26.407	7.000	1.024		3.150
284TS								25.033				
286T		11.000				13.071		27.905				
286TS								26.531				
324T	12.500	10.500	15.157	NPT 2"	12.961		5.250	29.602	8.000	1.307	0.657	3.228
324TS								28.102				
326T		12.000				14.567		31.106				
326TS								29.606				
364/5T	14.000	11.250/12.250	17.165	NPT 3"	16.654	15.394	5.875	33.701	9.000	1.480		3.150
364/5TS								31.575				
404/5T	16.000	12.250/13.752	19.921			17.520	6.625	38.074	10.000	1.812	0.807	3.937
404/5TS								35.074				
444/5T	18.000	14.500/16.500	21.929	2xNPT 3"	21.732	20.079	7.500	43.797	11.000	1.630		
444/5TS								40.047				
447T		20.000			20.984	23.640		47.339				
447TS								43.589				
449T		25.000				32.126		54.996				
449TS								51.246				
504/5T	20.000	16.000/18.000	24.724		21.850	21.969	8.500	49.445	12.500	2.146	1.250	4.724
504/5TS								46.875				
586/7T	23.000	22.000/25.000	29.528		25.787	29.921	10.00	61.389	14.500	2.492	1.181	5.236
586/7TS								54.514				

Data subject to change without notice.

TEFC – Explosion Proof *continued*

Frames 143T to 586/7TS

Frame	K	O	P	T	Shaft end						Bearings	
					d1	ES	N-W	R	S	U	D.E.	N.D.E
143T	1.654	7.000	7.000	*	A 4	1.575	2.250	0.765	0.187	0.875	6205 ZZ	6204 ZZ
145T												
182T	1.969	9.421	8.909	1.772		1.969	2.750	0.984	0.250	1.125	6307 ZZ	6206 ZZ
184T												
213T	2.165	11.156	10.709			2.480	3.375	1.203	0.313	1.375	6308 ZZ	6207 ZZ
215T												
254T	2.559	12.352	12.224	2.087		2.756	4.000	1.406	0.375	1.625	6309 ZZ-C3	6209 ZZ-C3
256T												
284T	2.953	14.362		2.441		3.149	4.622	1.594	0.500	1.875	6311 ZZ-C3	6211 ZZ-C3
284TS			14.094			2.480	3.250	1.406	0.375	1.625		
286T						3.149	4.622	1.594	0.500	1.875		
286TS						2.480	3.250	1.406	0.375	1.625		
324T	3.346	15.992	15.697	2.795		3.937	5.250	1.844	0.500	2.125	6312 ZZ-C3	6212 ZZ-C3
324TS						2.756	3.750	1.594		1.875		
326T						3.937	5.250	1.844		2.125		
326TS						2.756	3.750	1.594		1.875		
364/5T	4.134	18.898	18.583		DUNC 3/4"-10	4.330	5.874	2.019	0.625	2.375	6314 C3	6314 C3
364/5TS						1.968	3.748	1.591	0.500	1.875		
404/5T	5.433	19.843				5.512	7.250	2.449	0.750	2.875	6217 C3	
404/5TS						2.756	4.250	1.842	0.500	2.125	6314 C3	
444/5T	5.591	23.622	24.016	3.543		7.087	8.500	2.880	0.875	3.375	6219 C3	6316 C3
444/5TS						3.000	4.750	2.021	0.625	2.375	6314 C3	6314 C3
447T						7.087	8.500	2.880	0.875	3.375	6319 C3	6316 C3
447TS						3.000	4.750	2.021	0.625	2.375	6314 C3	6314 C3
449T	7.104					7.087	8.500	2.880	0.875	3.375	6322 C3	6319 C3
449TS						3.000	4.750	2.021	0.625	2.375	6314 C3	6314 C3
504/5T	5.984	25.197	24.212			8.661	10.630	3.134	0.875	3.625	6319 C3	6316 C3
504/5TS						3.000	4.750	2.021	0.625	2.375	6316 C3	
586/7T	7.874	30.428	30.709	4.291	DUNC 7/8"-9	8.661	11.625	3.312	1000.000	3.875	6322 C3	6319 C3
586/7TS					DUNC 3/4"-10	3.000	4.750	2.021	0.625	2.375	6314 C3	6314 C3

Frames 143T to 586/7TS

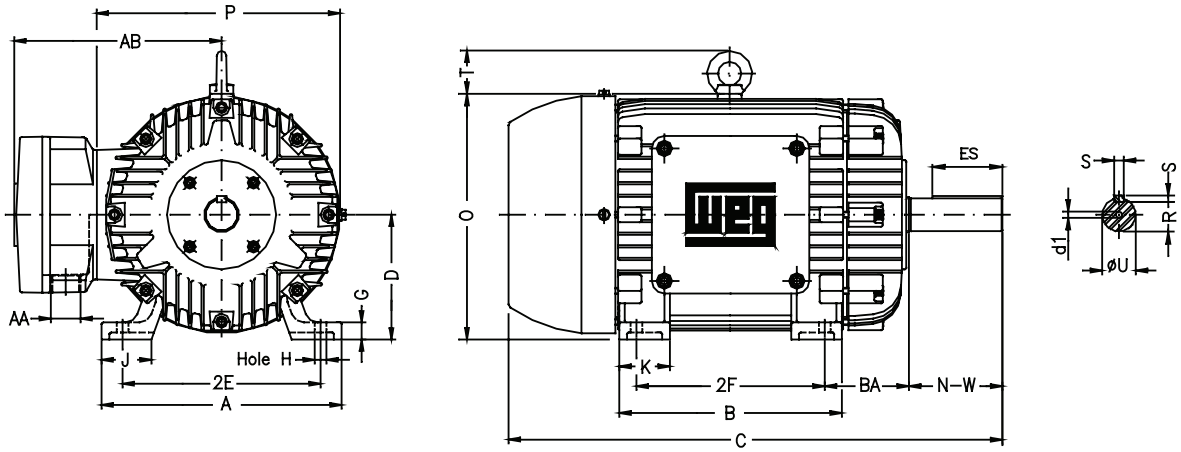

Fractional - Three Phase - TEFC - NEMA Premium®

Frame	2E	J	A	P	AB	AH	2F	B	BA	CH	U	N-W	Key Length	R	D
48	4.236	1.835	6.142	6.693	5.52	1.689	2.748	3.543	2.5	1.417	0.5	1.5	1.26	0.451	3
W56	4.874	1.62	6.535	6.693	5.52	2.063	3	4.016	2.75	1.417	0.625	1.874	1.417	0.517	3.5
56	4.874	1.732	6.535	7.638	5.882	2.062	3	4.016	2.75	1.377	0.625	1.874	1.417	0.517	3.5
56H	4.874	1.732	6.535	7.638	5.882	2.062	3.000/5.000	6.496	2.75	1.377	0.625	1.874	1.417	0.517	3.5

Frame	H1	G	HB	O	HD	HK	Hole H	C	LL	LM	S	AA	T	DE	NDE
48	1.22	0.075	1.559	5.83	6.354	2.65	0.343		3.835	3.697		0.881”	0.524	6203 ZZ	6202 ZZ
W56	1.22	0.12	2.055	6.33	6.854	2.65	0.343		3.835	3.697	0.187	0.881”	0.524	6203 ZZ	6202 ZZ
56	1.22	0.12	1.783	6.724	7.327	2.638	0.343		4.543	4.106	0.187	0.881”	0.603	6203 ZZ	6202 ZZ
56H	1.22	0.12	1.783	6.724	7.327	2.638	0.343		4.543	4.106	0.187	0.881”	0.603	6204 ZZ	6202 ZZ

Frame 48

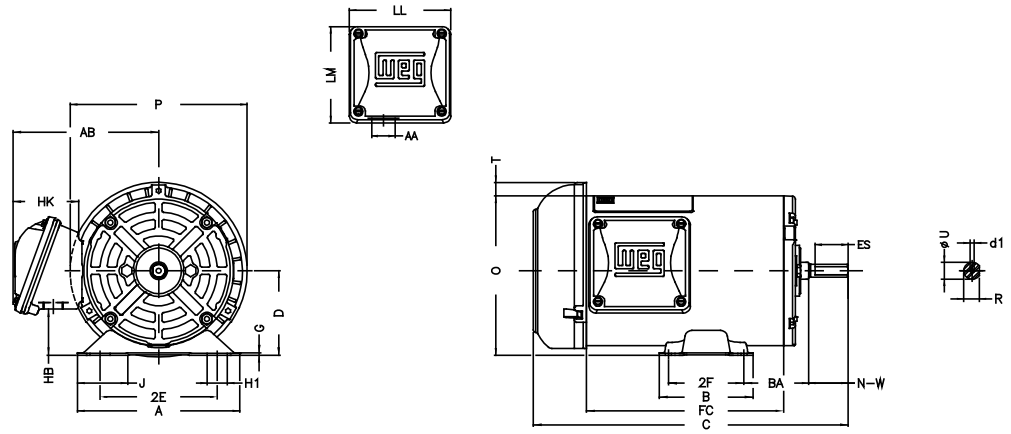

Frame W56

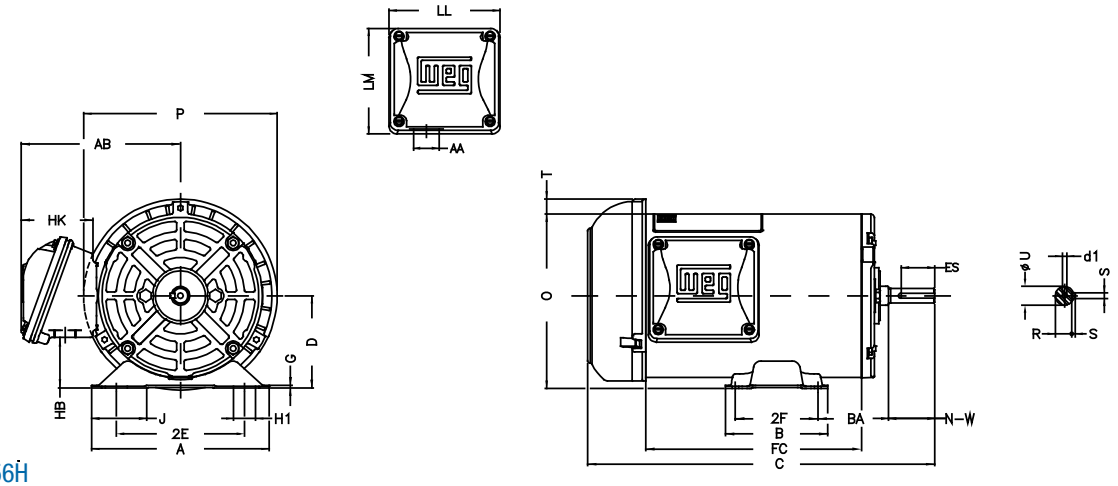

Frame 56 - 56H

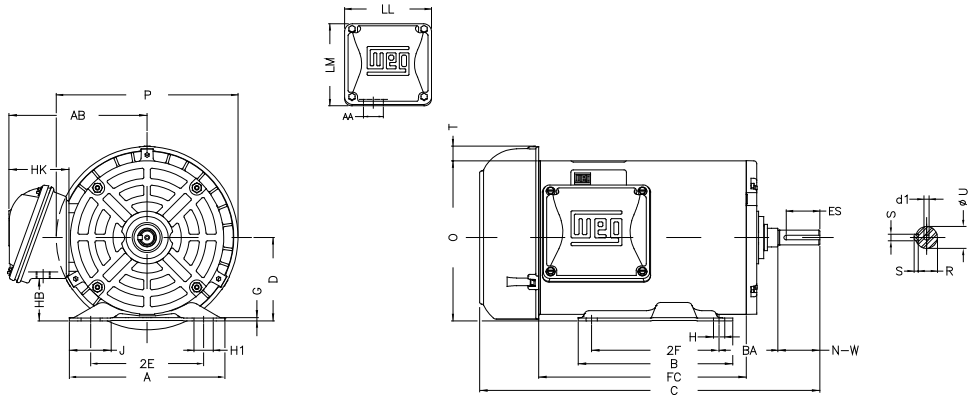

Data subject to change without notice.

Fractional - Three Phase - TEFC - NEMA Premium® - C-Face

Frame	Type	Flange	Size	AJ	AK	BD	S	T	AH	Angle	BF Number
W56	C	C	FC-149	5.874	4.5	6.47	UNC 3/8"x16-2B	0.157	2.063	45°	4
48	C	C	FC-95	3.748	3	4.74	UNC 1/4"x20-2B	0.157	1.689	45°	4
56	C	C	FC-149	5.874	4.5	6.45	UNC 3/8"x16-2B	0.157	2.062	45°	4
56H	C	C	FC-149	5.874	4.5	6.45	UNC 3/8"x16-2B	0.157	2.062	45°	4

Frame W56

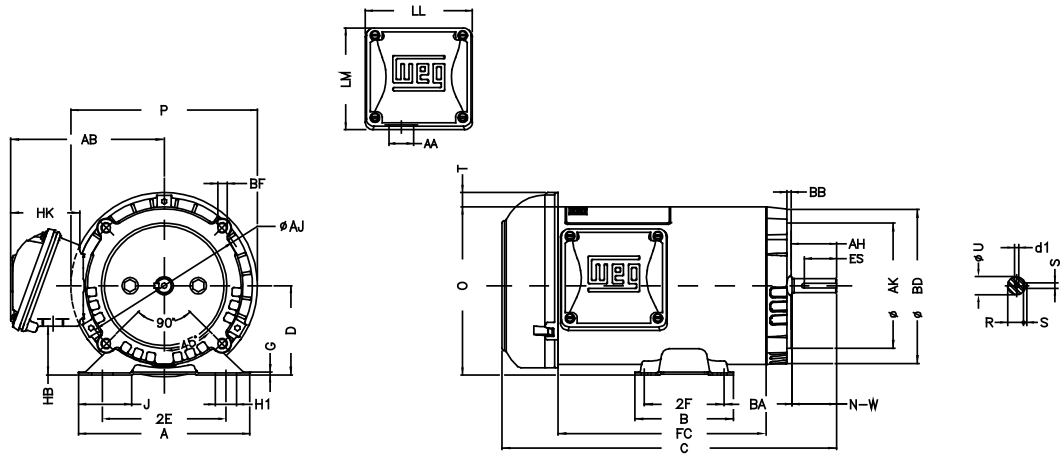

Frame 48

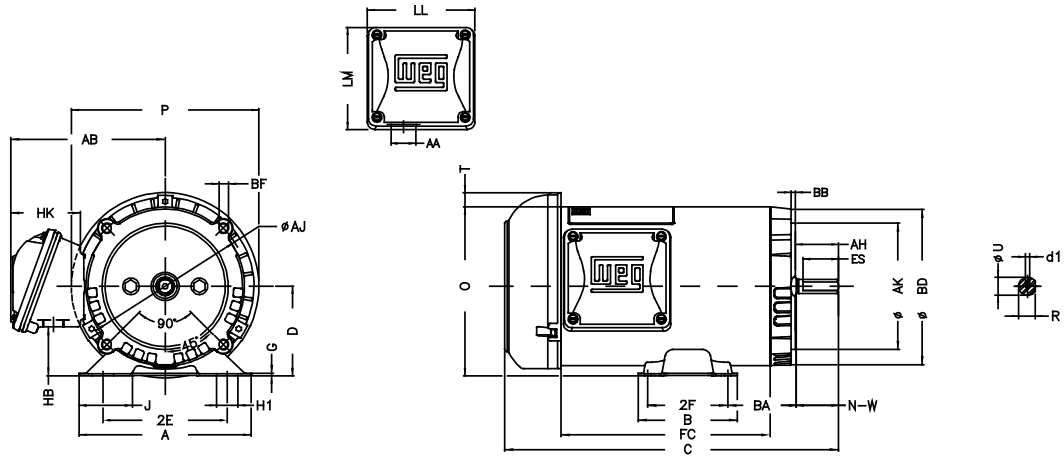

Frame 56/56H

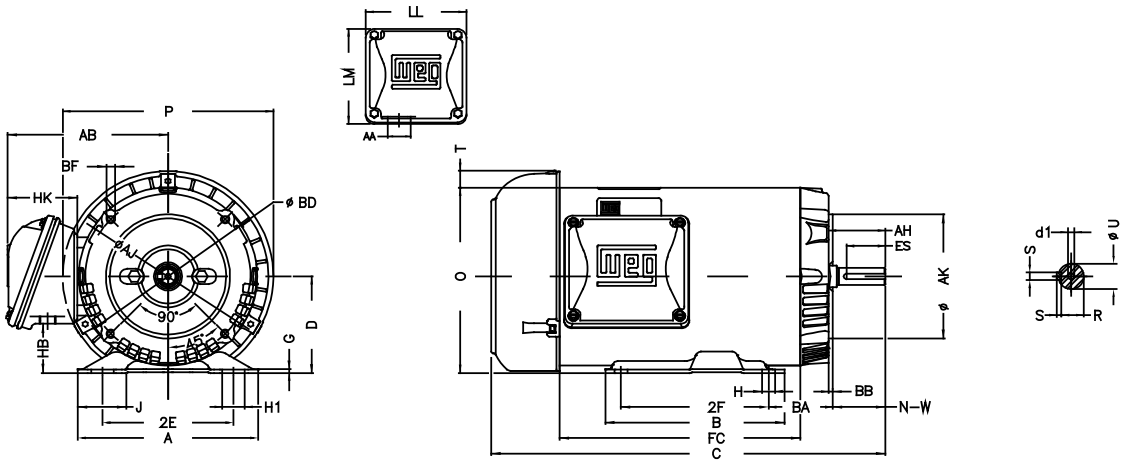

Fractional - Three Phase - TEFC - Standard Efficiency

Frame	2E	J	A	P	AB	AH	2F	B	BA	CH	U	d1	N-W	Key Length	R	D
48	4.236	1.835	6.142	6.693	5.52	1.689	2.748	3.543	2.5	1.417	0.5	A 3,15	1.5	1.26	0.451	3
W56	4.874	1.62	6.535	6.693	5.52	2.063	3	4.016	2.75	1.417	0.625	A 3,15	1.874	1.417	0.517	3.5
56	4.874	1.732	6.535	7.638	5.882	2.062	3	4.016	2.75	1.377	0.625	A 3,15	1.874	1.417	0.517	3.5
56H	4.874	1.732	6.535	7.638	5.882	2.062	3.000/5.000	6.496	2.75	1.377	0.625	A 3,15	1.874	1.417	0.517	3.5

Frame	H1	G	HB	O	HD	HK	Hole H	C	LL	LM	AJ	S	AA	T	DE	NDE
48	1.22	0.075	1.559	5.83	6.354	2.65	0.343	-	3.835	3.697	5.874		0.881”	0.524	6203 ZZ	6202 ZZ
W56	1.22	0.12	2.055	6.33	6.854	2.65	0.343	-	3.835	3.697	3.748	0.187	0.881”	0.524	6203 ZZ	6202 ZZ
56	1.22	0.12	1.783	6.724	7.327	2.638	0.343	-	4.543	4.106	5.874	0.187	0.881”	0.603	6203 ZZ	6202 ZZ
56H	1.22	0.12	1.783	6.724	7.327	2.638	0.343	-	4.543	4.106	5.874	0.187	0.881”	0.603	6204 ZZ	6202 ZZ

Frame 48

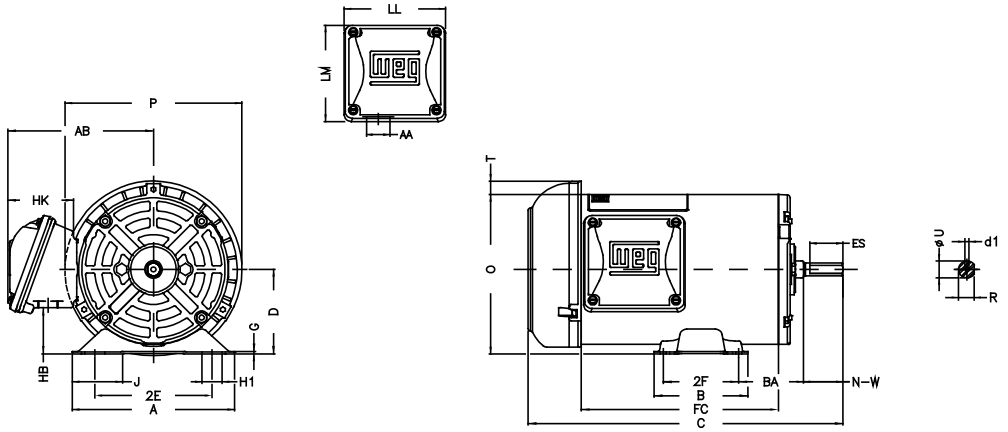

Frame W56

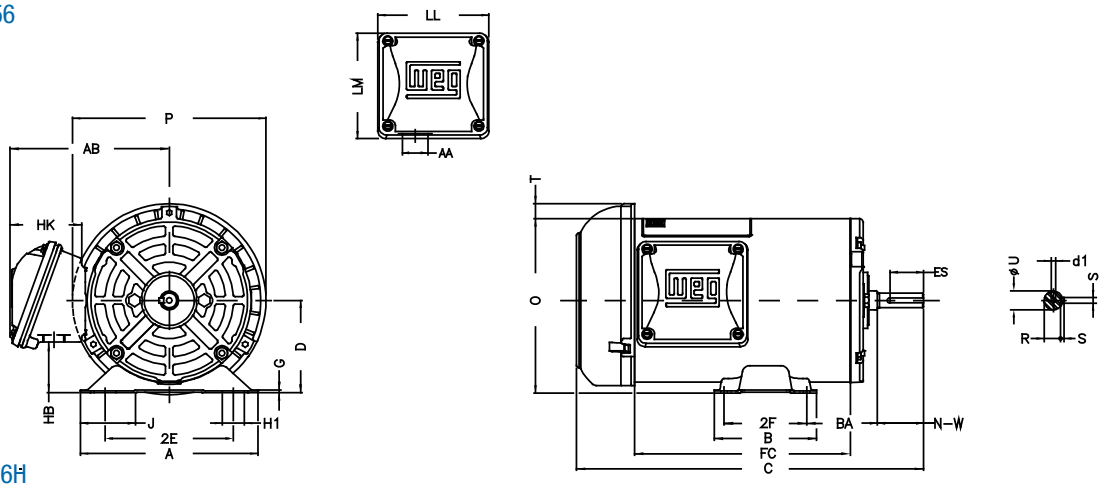

Frame 56 - 56H

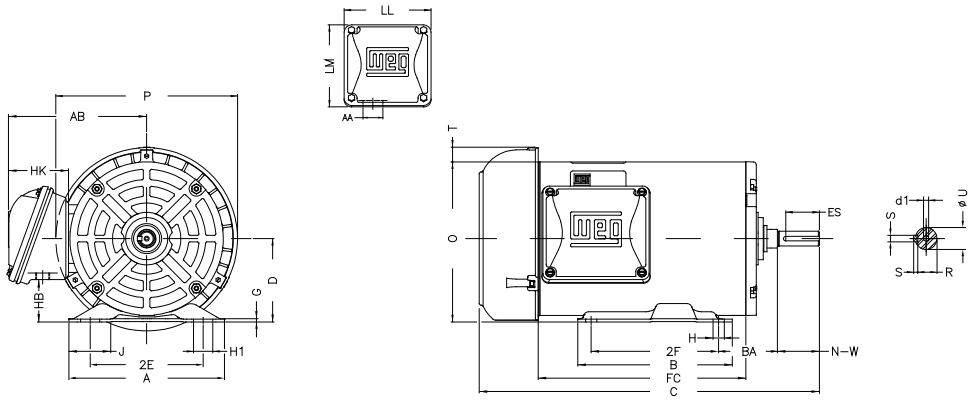

Data subject to change without notice.

Fractional - Three Phase - TEFC - Standard Efficiency - C-Face

Frame	Type	Flange	Size	BB	AJ	AK	BD	S	T	AH	Angle	BF Number
W56	C	C	FC-149	0.157	5.874	4.5	6.47	UNC 3/8"x16-2B	0.157	2.063	45°	4
48	C	C	FC-95	0.157	3.748	3	4.74	UNC 1/4"x20-2B	0.157	1.689	45°	4
56	C	C	FC-149	0.157	5.874	4.5	6.45	UNC 3/8"x16-2B	0.157	2.062	45°	4
56H	C	C	FC-149	0.157	5.874	4.5	6.45	UNC 3/8"x16-2B	0.157	2.062	45°	4

Frame W56

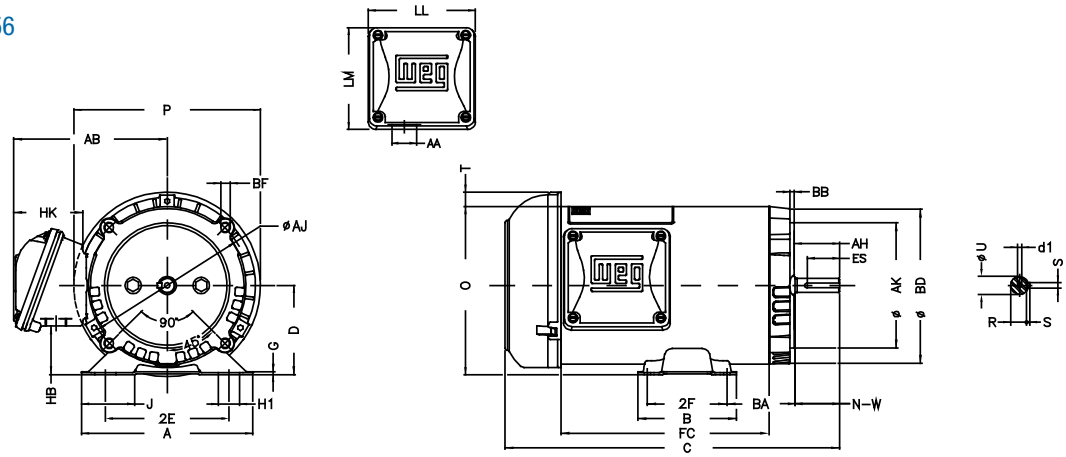

Frame 48

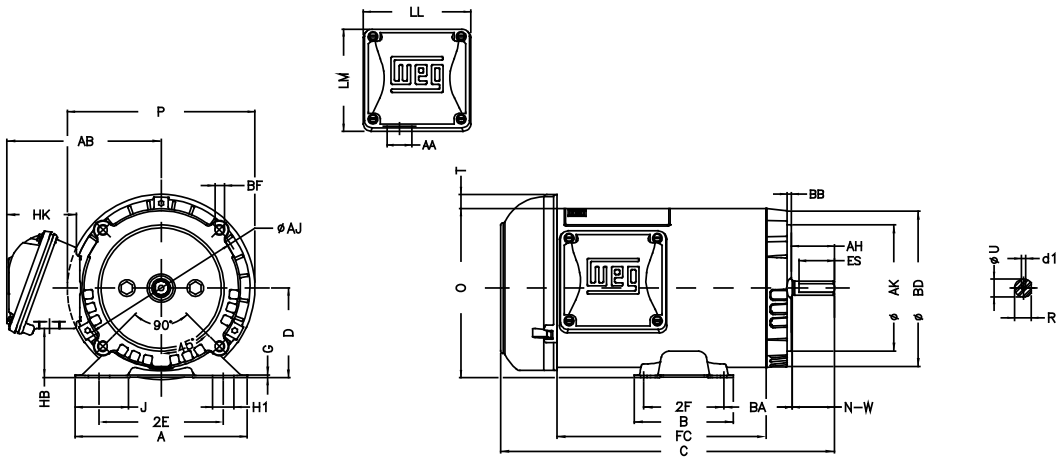

Frame 56/56H

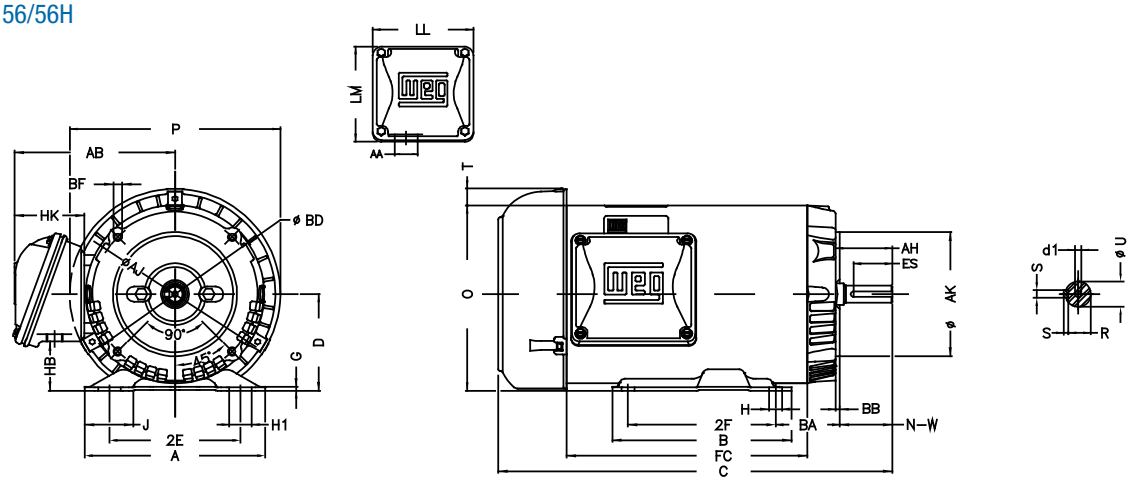

Fractional - Three Phase - ODP - Premium Efficiency

Frame	2E	J	A	P	AB	AH	2F	B	BA	CH	U	N-W	Key Length	R	D
48	4.236	1.835	6.142	5.709	5.52	1.689	2.748	3.543	2.5	1.22	0.5	1.5	1.26	0.451	3
W56	4.874	1.62	6.535	5.709	5.52	2.063	3	4.016	2.75	1.22	0.625	1.874	1.417	0.517	3.5
56	4.874	1.732	6.535	6.456	3.323	2.062	3	4.016	2.75	1.377	0.625	1.874	1.417	0.517	3.5
56H	4.874	1.732	6.535	6.456	5.882	2.062	3.000/5.000	6.496	2.75	1.377	0.625	1.874	1.417	0.517	3.5

Frame	H1	G	HB	O	HD	HK	Hole H	C	LL	LM	S	AA	T	DE	NDE
48	1.22	0.075	1.559	5.83	6.354	2.65	0.343		3.835	3.697		NPT 1/2"	0.524	6203 ZZ	6202 ZZ
W56	1.22	0.12	2.055	6.33	6.854	2.65	0.343		3.835	3.697	0.187	NPT 1/2"	0.524	6203 ZZ	6202 ZZ
56	1.22	0.12	1.784	6.724	6.728	2.629	0.343		4.563	4.09	0.187	NPT 1/2"	0.004	6203 ZZ	6202 ZZ
56H	1.22	0.12	1.783	6.724	6.728	2.638	0.343		4.543	4.106	0.187	NPT 1/2"	0.004	6204 ZZ	6202 ZZ

Frame 48

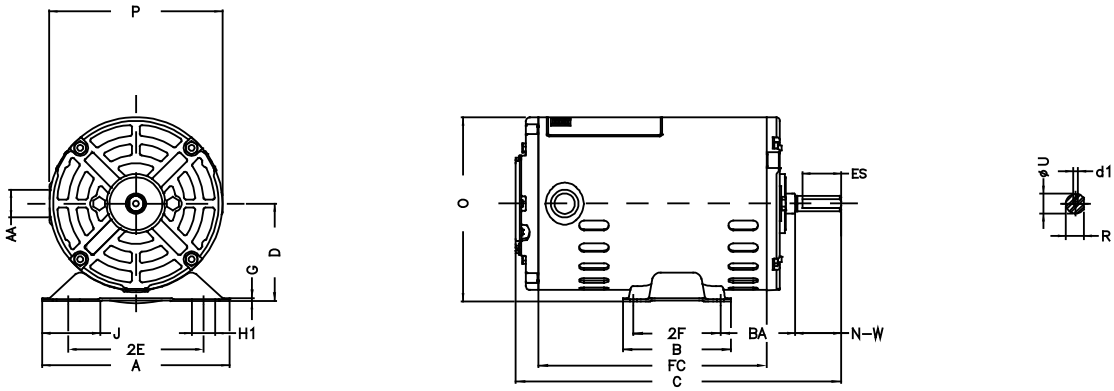

Frame W56

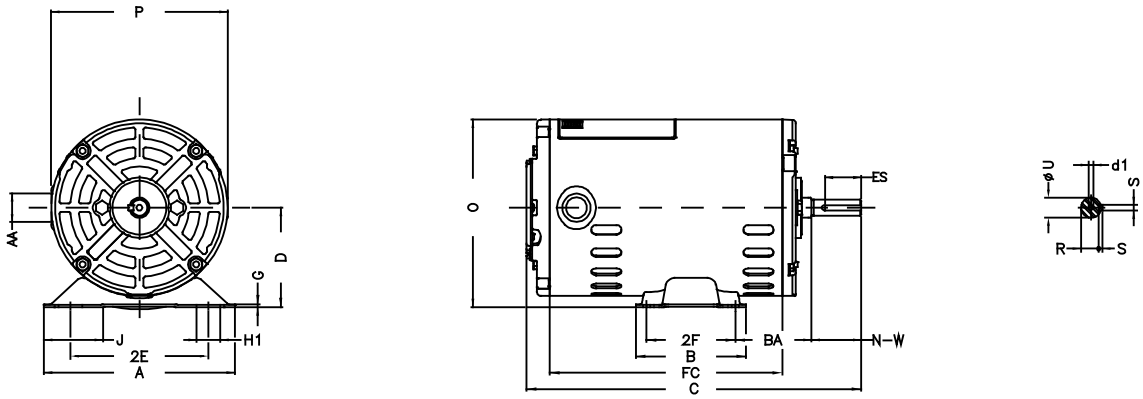

Frame 56 - 56H

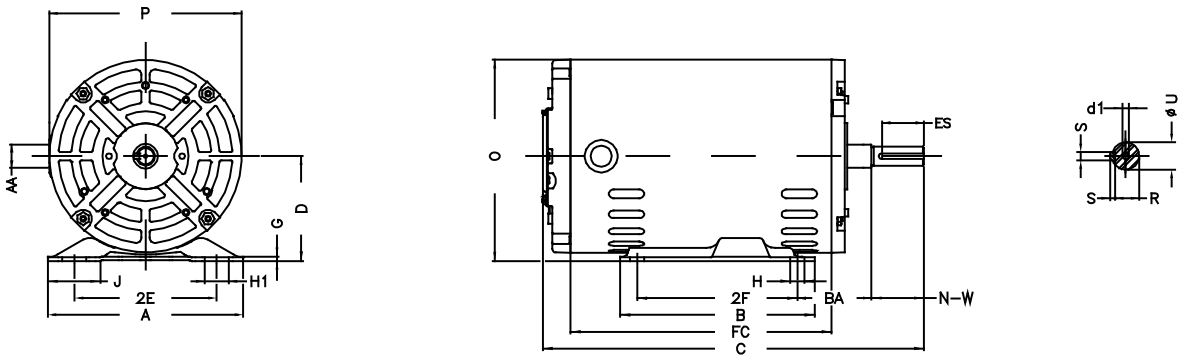

Data subject to change without notice.

Fractional - Three Phase - ODP - Premium Efficiency - C-Face

Frame	Type	Flange	Size	AJ	AK	BD	S	T	AH	Angle	BF Number
W56	C	C	FC-149	5.874	4.5	6.47	UNC 3/8"x16-2B	0.157	2.063	45°	4
48	C	C	FC-95	3.748	3	4.74	UNC 1/4"x20-2B	0.157	1.689	45°	4
56	C	C	FC-149	5.874	4.5	6.45	UNC 3/8"x16-2B	0.157	2.062	45°	4
56H	C	C	FC-149	5.874	4.5	6.45	UNC 3/8"x16-2B	0.157	2.062	45°	4

Frame 48

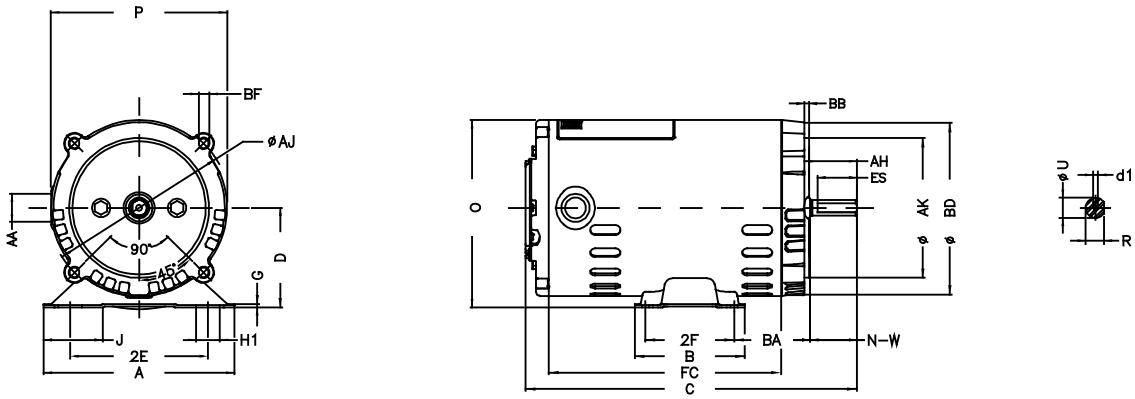

Frame W56

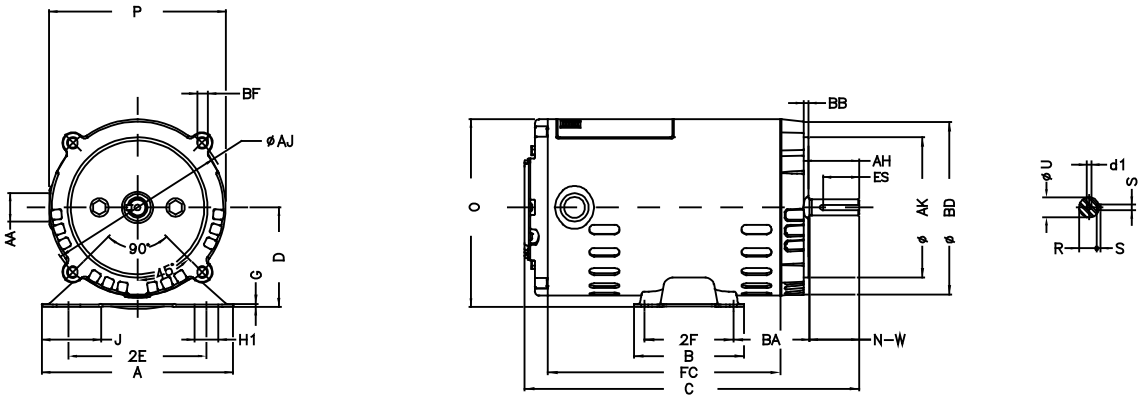

Frame 56 - 56H

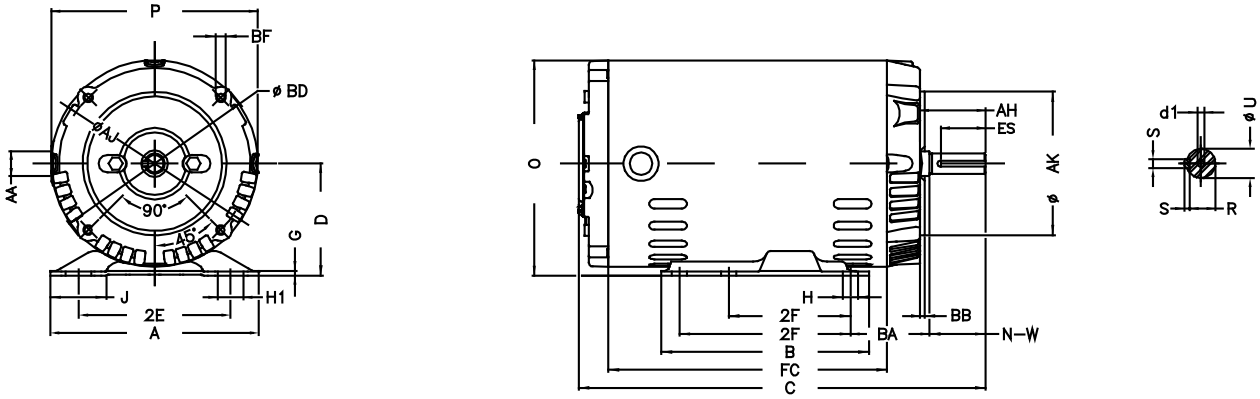

Data subject to change without notice.

Fractional - Three Phase - ODP - Standard Efficiency

Frame	2E	J	A	P	AB	AH	2F	B	BA	CH	U	N-W	Key Length	R	D
48	4.236	1.835	6.142	5.709	5.52	1.689	2.748	3.543	2.5	1.22	0.5	1.5	1.26	0.451	3
W56	4.874	1.62	6.535	5.709	5.52	2.063	3	4.016	2.75	1.22	0.625	1.874	1.417	0.517	3.5
56	4.874	1.732	6.535	6.456	3.323	2.062	3	4.016	2.75	1.377	0.625	1.874	1.417	0.517	3.5
56H	4.874	1.732	6.535	6.456	5.882	2.062	3.000/5.000	6.496	2.75	1.377	0.625	1.874	1.417	0.517	3.5

Frame	H1	G	HB	O	HD	HK	Hole H	C	LL	LM	S	AA	T	DE	NDE
48	1.22	0.075	1.559	5.83	6.354	2.65	0.343		3.835	3.697		NPT 1/2”	0.524	6203 ZZ	6202 ZZ
W56	1.22	0.12	2.055	6.33	6.854	2.65	0.343		3.835	3.697	0.187	NPT 1/2”	0.524	6203 ZZ	6202 ZZ
56	1.22	0.12	1.784	6.724	6.728	2.629	0.343		4.563	4.09	0.187	NPT 1/2”	0.004	6203 ZZ	6202 ZZ
56H	1.22	0.12	1.783	6.724	6.728	2.638	0.343		4.543	4.106	0.187	NPT 1/2”	0.004	6204 ZZ	6202 ZZ

Frame 48

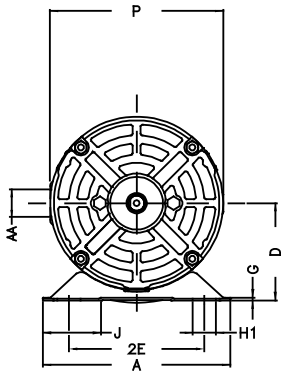

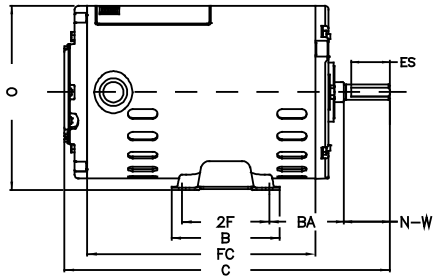

Frame W56

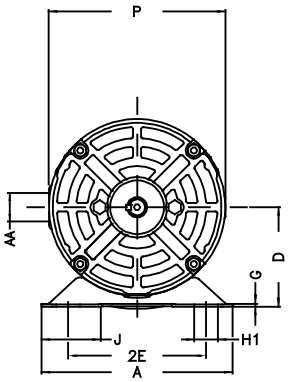

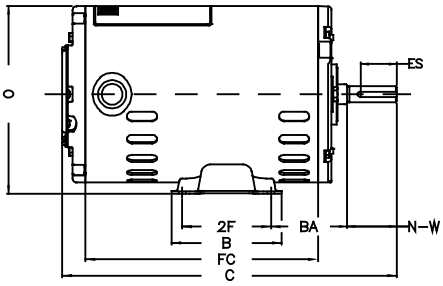

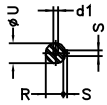

Frame 56 - 56H

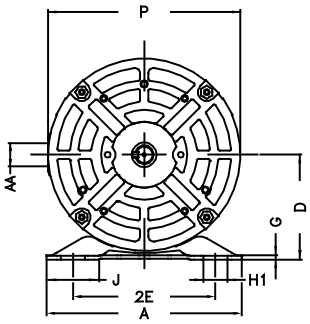

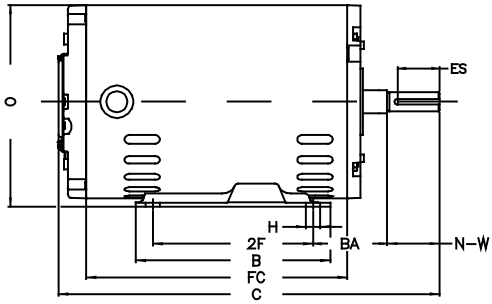

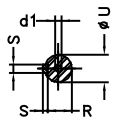

Data subject to change without notice.

Fractional - Three Phase - ODP - Standard Efficiency - C-Face

Frame	Type	Flange	Size	AJ	AK	BD	BB	S	T	AH	Angle	BF Number
W56	C	C	FC-149	5.874	4.5	6.47	0.157	UNC 3/8"x16-2B	0.157	2.063	45°	4
48	C	C	FC-95	3.748	3	4.74	0.157	UNC 1/4"x20-2B	0.157	1.689	45°	4
56	C	C	FC-149	5.874	4.5	6.45	0.157	UNC 3/8"x16-2B	0.157	2.062	45°	4
56H	C	C	FC-149	5.874	4.5	6.45	0.157	UNC 3/8"x16-2B	0.157	2.062	45°	4

Frame 48

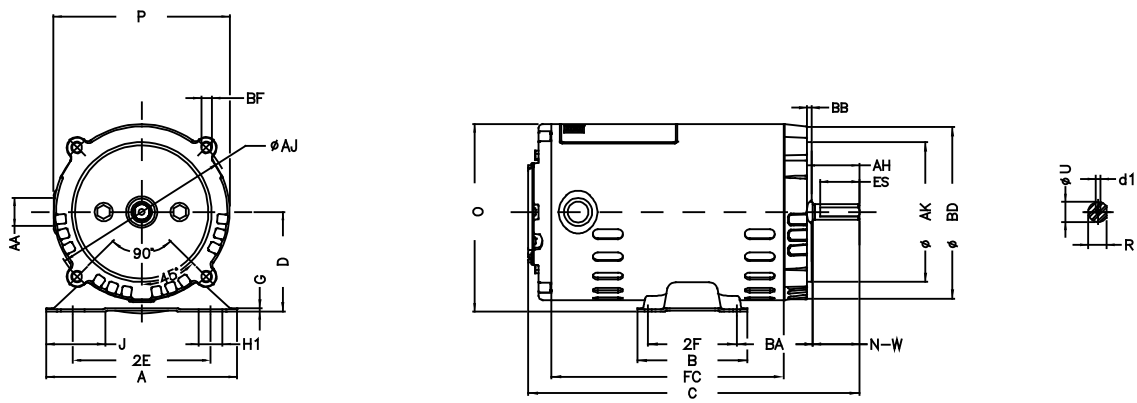

Frame W56

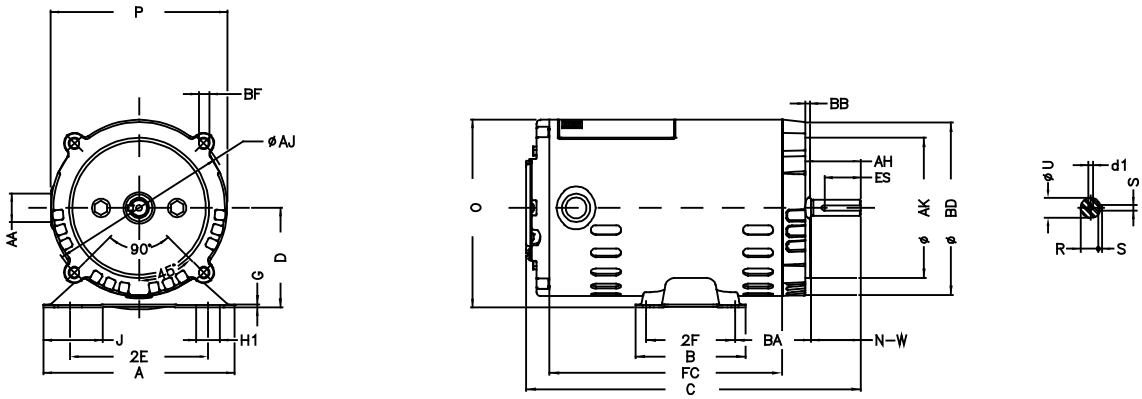

Frame 56 - 56H

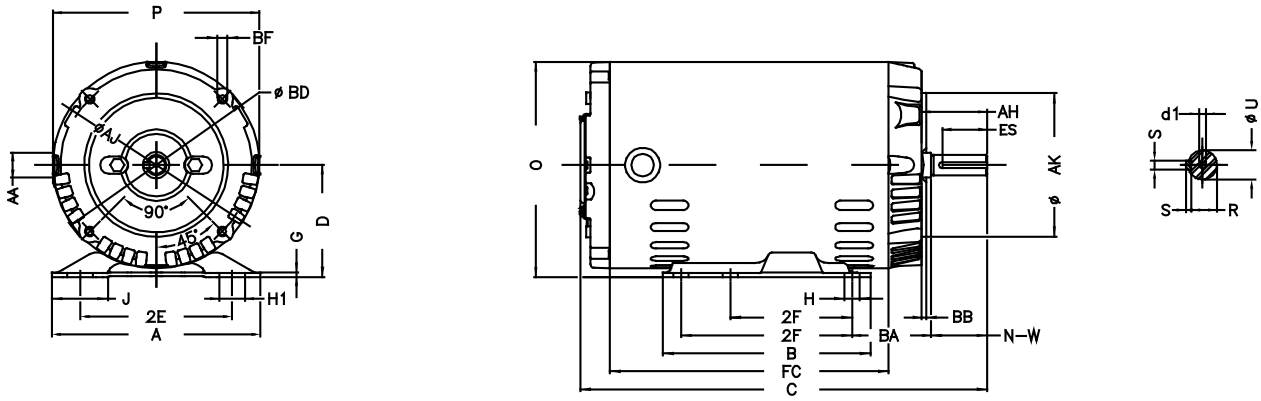

Cooling Tower Motors - Three Phase - TEFC

Frame	2E	J	A	P	AB	AH	2F	B	BA	CH	U	N-W	Key Length	R	D
143T	5.5	1.437	6.457	6.85	6.26	2.125	4	5.157	2.25	0.708	0.875	2.25	1.575	0.771	3.5
143/5T	5.5	1.437	6.457	6.85	6.26	2.125	4.000/5.000	6.142	2.25	0.708	0.875	2.25	1.575	0.771	3.5
145T	5.5	1.437	6.457	6.85	6.26	2.125	5	6.142	2.25	0.708	0.875	2.25	1.575	0.771	3.5
182T	7.5	1.614	8.661	8.504	7.565	2.625	4.5	5.945	2.75	1.22	1.125	2.75	1.969	0.984	4.5
182/4T	7.5	1.614	8.661	8.504	7.565	2.625	4.500/5.500	6.969	2.75	1.22	1.125	2.75	1.969	0.984	4.5
213T	8.5	1.779	9.764	10.669	8.667	3.125	5.5	7.362	3.5	1.22	1.375	3.375	2.48	1.203	5.25
213/5T	8.5	1.779	9.764	10.669	8.667	3.125	5.500/7.000	8.858	3.5	1.22	1.375	3.375	2.48	1.203	5.25
215T	8.5	1.779	9.764	10.669	8.667	3.125	7	8.858	3.5	1.22	1.375	3.375	2.48	1.203	5.25
254T	10	2.539	12.126	12.48	10.483	3.75	8.252	10	4.25	1.85	1.625	4	2.756	1.416	6.25
254/6T	10	2.539	12.126	12.48	10.483	3.75	8.252/10.000	11.732	4.25	1.85	1.625	4	2.756	1.416	6.25
256T	10	2.539	12.126	12.48	10.483	3.75	10	11.732	4.25	1.85	1.625	4	2.756	1.416	6.25
284TS	11	3.11	13.78	13.78	11.073	3	9.5	11.575	4.75	2.244	1.625	3.25	2.48	1.416	7
284T	11	3.11	13.78	13.78	11.073	4.375	9.5	11.575	4.75	2.244	1.875	4.622	3.149	1.594	7
284/6T	11	3.11	13.78	13.78	11.073	4.375	9.500/11.000	13.071	4.75	2.244	1.875	4.622	3.149	1.594	7
284/6TS	11	3.11	13.78	13.78	11.073	3	9.500/11.000	13.071	4.75	2.244	1.625	3.25	2.48	1.416	7
324T	12.5	3.189	15.157	14.961	12.575	5	10.5	13.071	5.25	2.638	2.125	5.25	3.937	1.844	8
324TS	12.5	3.189	15.157	14.961	12.575	3.5	10.5	13.071	5.25	2.638	1.875	3.75	2.756	1.594	8
324/6TS	12.5	3.189	15.157	14.961	12.575	3.5	12	14.567	5.25	2.638	1.875	3.75	2.756	1.594	8
324/6T	12.5	3.189	15.157	14.961	12.575	5	10.500/12.000	14.567	5.25	2.638	2.125	5.25	3.937	1.844	8
326T	12.5	3.189	15.157	14.961	12.575	5	12	14.567	5.25	2.638	2.125	5.25	3.937	1.844	8
326TS	12.5	3.189	15.157	14.961	12.575	3.5	12	14.567	5.25	2.638	1.875	3.75	2.756	1.594	8
364/5T	14.016	3.15	17.165	17.914	16.016	5.625	11.260/12.244	15.512	5.875	3.189	2.375	5.874	4.33	2.019	9
364/5TS	14.016	3.15	17.165	17.914	16.016	3.5	11.260/12.244	15.512	5.875	3.189	1.875	3.748	1.968	1.591	9
404/5T	15.984	3.937	19.921	19.134	16.016	7	12.244/13.740	18.386	6.625	3.189	2.875	7.25	5.512	2.449	10
404/5TS	15.984	3.937	19.921	19.134	16.016	4	12.244/13.740	18.386	6.625	3.189	2.125	4.25	2.756	1.842	10
444/5T	18	3.937	21.929	23.583	18.57	8.25	14.500/16.500	20.315	7.5	3.583	3.375	8.5	7.087	2.88	11
444/5TS	18	3.937	21.929	23.583	18.57	4.5	14.500/16.500	20.315	7.5	3.583	2.375	4.75	3	2.021	11
445/7T	18	3.937	21.929	23.583	20.559	8.25	16.500/20.000	23.897	7.5	3.583	3.375	8.5	7.087	2.88	11
445/7TS	18	3.937	21.929	23.583	20.559	4.5	16.500/20.000	23.897	7.5	3.583	2.375	4.75	3	2.021	11
447/9T	18	3.937	21.929	23.583	20.559	8.25	20.000/25.000	31.535	7.5	3.583	3.375	8.5	7.087	2.88	11
447/9TS	18	3.937	21.929	23.583	20.559	4.5	20.000/25.000	31.535	7.5	3.583	2.375	4.75	3	2.021	11
L447/9T	18	3.937	21.929	25.866	23.72	8.25	20.000/25.000	31.535	7.5	3.583	3.375	8.5	7.087	2.88	11
L447/9TS	18	3.937	21.929	25.866	23.72	4.5	20.000/25.000	31.535	7.5	3.583	2.375	4.75	3	2.021	11
504/5T	20	4.724	24.724	25.866	20.599	10.375	16.000/18.000	24.449	8.5	3.583	3.625	10.63	8.661	3.134	12.5
504/5TS	20	4.724	24.724	25.866	20.599	4.5	16.000/18.000	24.449	8.5	3.583	2.375	4.75	3	2.021	12.5
586/7T	23	5.512	29.528	28.977	23.189	11.375	22.000/25.000	29.921	10	3.583	3.875	11.625	8.661	3.312	14.5
586/7TS	23	5.512	29.528	28.977	23.189	4.5	22.000/25.000	29.921	10	3.583	2.375	4.75	3	2.021	14.5
588/9T	23	5.512	29.528	28.977	27.44	11.375	28.000/32.000	37.98	10	3.583	3.875	11.625	8.661	3.312	14.5
588/9TS	23	5.512	29.528	28.977	27.44	4.5	28.000/32.000	37.98	10	3.583	2.375	4.75	3	2.021	14.5

continued on next page

Data subject to change without notice.

Cooling Tower Motors - Three Phase - TEFC - *continued*

Frame	G	HB	O	HD	HF	HH	HK	Hole H	C	LL	LM	S	AA	T	DE	NDE
143T	0.354	1.787	7.122		3.5	4.25	2.638	0.344	12.346	4.528	4.094	0.187	NPT 3/4”		6205 2RS	6204 2RS
143/5T	0.354	1.787	7.122		3.5	4.75	2.638	0.344	13.358	4.528	4.094	0.187	NPT 3/4”		6205 2RS	6204 2RS
145T	0.354	1.787	7.122		3.5	4.75	2.638	0.344	13.358	4.528	4.094	0.187	NPT 3/4”		6205 2RS	6204 2RS
182T	0.394	2.236	9.343	11.115	4.5	5	3.15	0.406	14.86	5.512	5.236	0.25	NPT 1”	1.772	6207 2RS	6206 2RS
182/4T	0.394	2.236	9.343	11.115	4.5	5.5	3.15	0.406	15.86	5.512	5.236	0.25	NPT 1”	1.772	6207 2RS	6206 2RS
213T	0.669	2.985	10.508	12.613	5.25	6.25	3.15	0.406	18.021	5.512	5.236	0.313	NPT 1”	2.105	6308 2RS	6207 2RS
213/5T	0.669	2.985	10.508	12.613	5.25	7	3.15	0.406	19.517	5.512	5.236	0.313	NPT 1”	2.105	6308 2RS	6207 2RS
215T	0.669	2.985	10.508	12.613	5.25	7	3.15	0.406	19.517	5.512	5.236	0.313	NPT 1”	2.105	6308 2RS	6207 2RS
254T	0.827	3.061	12.598	14.685	6.565	8.376	3.976	0.531	23.213	7.815	7.48	0.375	NPT 1 1/2”	2.087	6309 2RS-C3	6209 2RS-C3
254/6T	0.827	3.061	12.598	14.685	6.565	9.25	3.976	0.531	24.945	7.815	7.48	0.375	NPT 1 1/2”	2.087	6309 2RS-C3	6209 2RS-C3
256T	0.827	3.061	12.598	14.685	6.565	9.25	3.976	0.531	24.945	7.815	7.48	0.375	NPT 1 1/2”	2.087	6309 2RS-C3	6209 2RS-C3
284TS	1.023	3.535	14.067	16.154	7	9.5	3.976	0.531	25.061	7.815	7.48	0.375	NPT 1 1/2”	2.087	6311 2RS-C3	6211 2RS-C3
284T	1.023	3.535	14.067	16.154	7	9.5	3.976	0.531	26.433	7.815	7.48	0.5	NPT 1 1/2”	2.087	6311 2RS-C3	6211 2RS-C3
284/6T	1.023	3.535	14.067	16.154	7	10.25	3.976	0.531	27.929	7.815	7.48	0.5	NPT 1 1/2”	2.087	6311 2RS-C3	6211 2RS-C3
284/6TS	1.023	3.535	14.067	16.154	7	10.25	3.976	0.531	26.557	7.815	7.48	0.375	NPT 1 1/2”	2.087	6311 2RS-C3	6211 2RS-C3
324T	1.3	4.811	15.953	18.394	8.708	10.5	4.705	0.657	29.62	9.055	8.661	0.5	NPT 2”	2.441	6312 2RS-C3	6212 2RS-C3
324TS	1.3	4.811	15.953	18.394	8.708	10.5	4.705	0.657	28.12	9.055	8.661	0.5	NPT 2”	2.441	6312 2RS-C3	6212 2RS-C3
324/6TS	1.3	4.811	15.953	18.394	8.708	11.25	4.705	0.657	29.616	9.055	8.661	0.5	NPT 2”	2.441	6312 2RS-C3	6212 2RS-C3
324/6T	1.3	4.811	15.953	18.394	8.708	11.25	4.705	0.657	31.116	9.055	8.661	0.5	NPT 2”	2.441	6312 2RS-C3	6212 2RS-C3
326T	1.3	4.811	15.953	18.394	8.708	11.25	4.705	0.657	31.116	9.055	8.661	0.5	NPT 2”	2.441	6312 2RS-C3	6212 2RS-C3
326TS	1.3	4.811	15.953	18.394	8.708	11.25	4.705	0.657	29.616	9.055	8.661	0.5	NPT 2”	2.441	6312 2RS-C3	6212 2RS-C3
364/5T	1.48	4.251	17.957	21.535		11.988	6.024	0.66	34.251	10.591	11.267	0.625	NPT 3”	3.578	6314 2RS-C3	6314 2RS-C3
364/5TS	1.48	4.251	17.957	21.535		11.988	6.024	0.66	32.276	10.591	11.267	0.5	NPT 3”	3.578	6314 C3	6314 C3
404/5T	1.811	5.252	19.566	23.11		13.496	6.024	0.81	39.73	10.591	11.267	0.75	NPT 3”	3.544	6316 2RS-C3	6314 2RS-C3
404/5TS	1.811	5.252	19.566	23.11		13.496	6.024	0.81	36.732	10.591	11.267	0.5	NPT 3”	3.544	6314 C3	6314 C3
444/5T	1.63	5.687	22.795			15.748	5.97	0.81	44.95	12.362	12.283	0.875	2xNPT 3”		6319 C3	6316 C3
444/5TS	1.63	5.687	22.795			15.748	5.97	0.81	41.2	12.362	12.283	0.625	2xNPT 3”		6314 C3	6314 C3
445/7T	1.654	12.488	22.795	27.527	20.724	11.811	6.929	0.81	48.701	14.921	15.039	0.875	2xNPT 3”	4.732	6319 C3	6316 C3
445/7TS	1.654	12.488	22.795	27.527	20.724	11.811	6.929	0.81	44.951	14.921	15.039	0.625	2xNPT 3”	4.732	6314 C3	6314 C3
447/9T	1.63	12.488	22.795	27.527	20.724	11.811	6.929	0.81	56.338	14.921	15.039	0.875	2xNPT 3”	4.732	6322 C3	6319 C3
447/9TS	1.63	12.488	22.795	27.527	20.724	11.811	6.929	0.81	52.588	14.921	15.039	0.625	2xNPT 3”	4.732	6314 C3	6314 C3
L447/9T	1.63	11.535	23.874	28.7	20.551	11.87	8.661	0.81	57.181	15.906	17.165	0.875	2xNPT 3”	4.826	6322 C3	6319 C3
L447/9TS	1.63	11.535	23.874	28.7	20.551	11.87	8.661	0.81	53.431	15.906	17.165	0.625	2xNPT 3”	4.826	6314 C3	6314 C3
504/5T	1.87	15.167	25.425	30.206	24.291	10.374	6.929	1.25	54.095	14.921	15.039	0.875	2xNPT 3”	4.781	6319 C3	6316 C3
504/5TS	1.87	15.167	25.425	30.206	24.291	10.374	6.929	1.25	48.215	14.921	15.039	0.625	2xNPT 3”	4.781	6314 C3	6314 C3
586/7T	2.492	18.575	28.985	35.74	26.732	13.346	8.661	1.181	61.902	15.906	17.165	1	2xNPT 3”	6.755	6322 C3	6319 C3
586/7TS	2.492	18.575	28.985	35.74	26.732	13.346	8.661	1.181	55.027	15.906	17.165	0.625	2xNPT 3”	6.755	6314 C3	6314 C3
588/9T	2.492	16.338	28.985	37.755	26.182	13.346	11.417	1.181	69.381	18.11	21.417	1	2xNPT 4”	8.77	6322 C3	6319 C3
588/9TS	2.492	16.338	28.985	37.755	26.182	13.346	11.417	1.181	62.506	18.11	21.417	0.625	2xNPT 4”	8.77	6314 C3	6314 C3

Drawings found on B-88 and B-89

Cooling Tower Motors - Three Phase - TEFC - *continued*

Frames 143 to 213/5

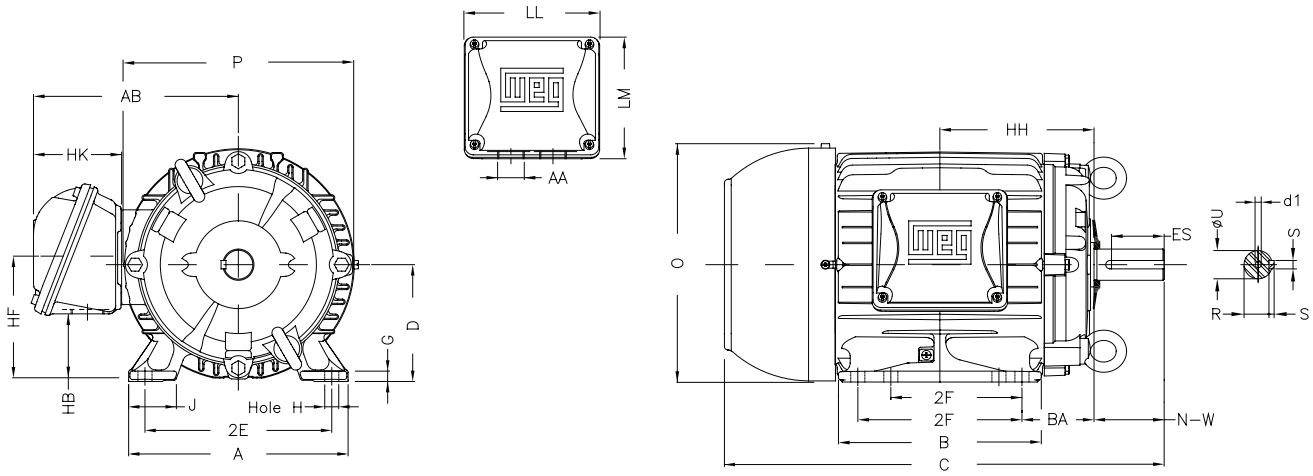

Frames 182 to 213/5

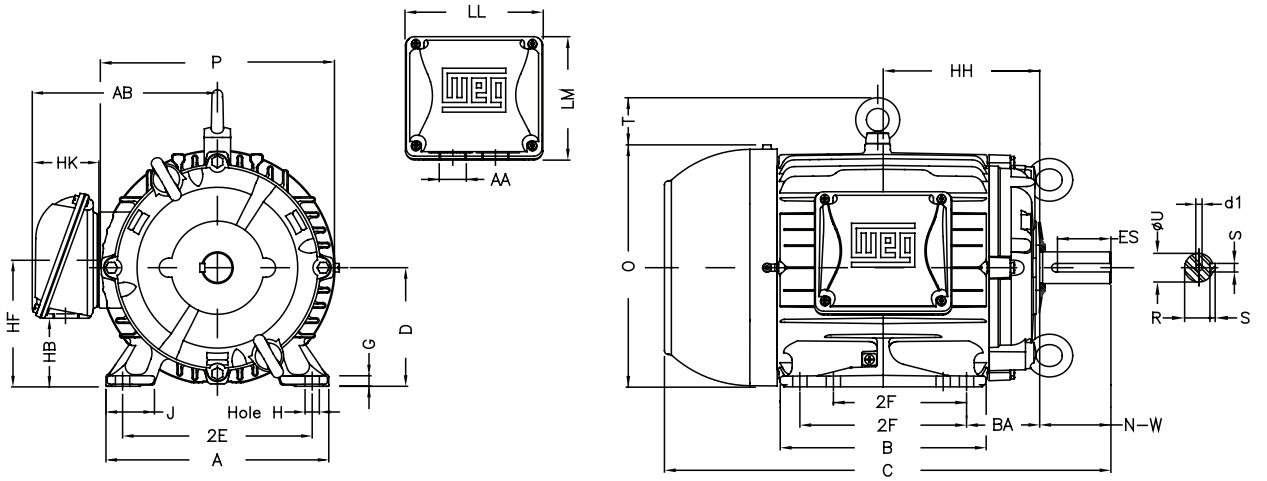

Data subject to change without notice.

Cooling Tower Motors - Three Phase - TEFC - *continued*

Frames 254 to 326

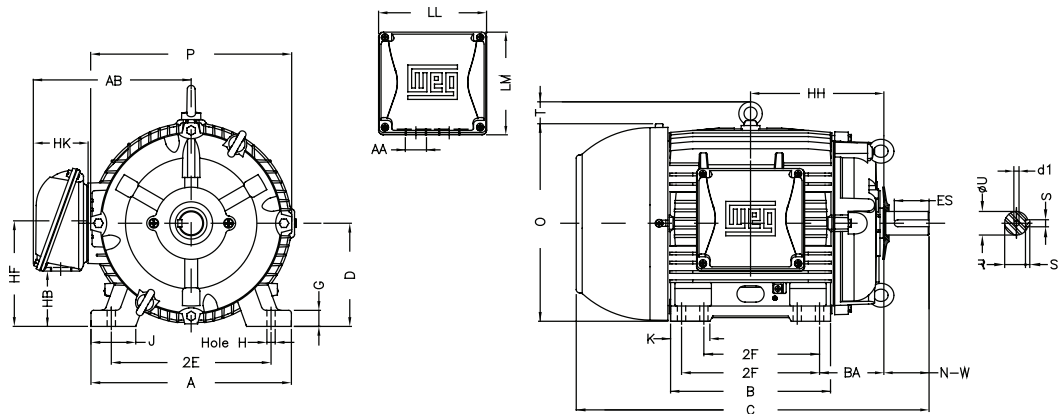

Frames 364/5 to 445/7

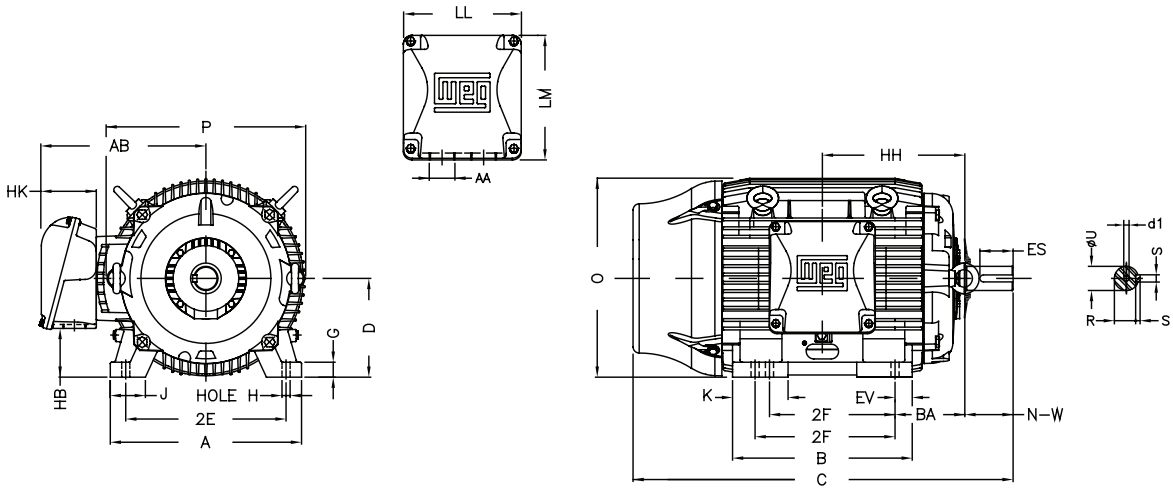

Frames 447/9 to 588/9

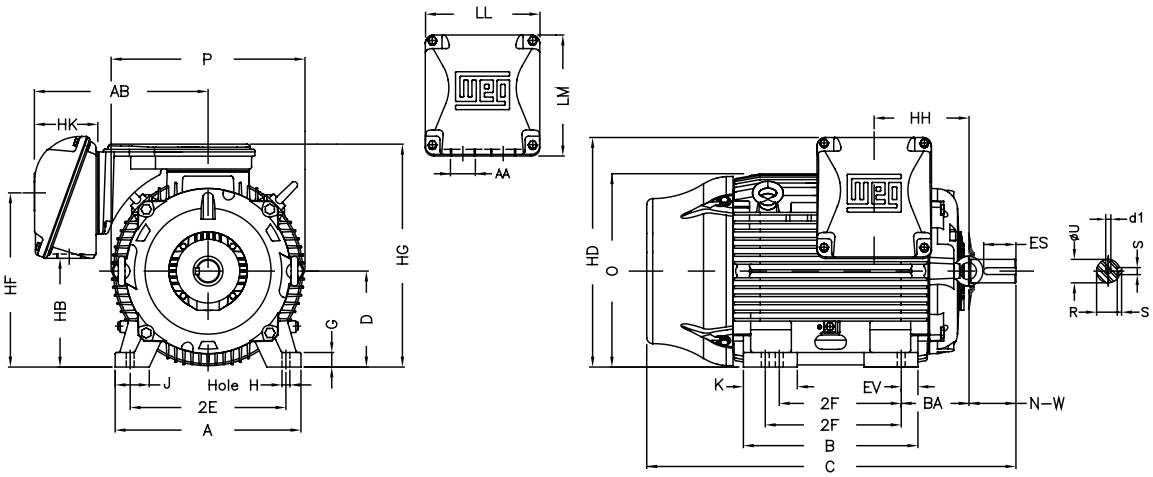

Cooling Tower Motors - Three Phase - TEAO

Frame	2E	J	A	P	AB	AH	2F	B	BA	CH	U	N-W	Key Length	R	D
143T	5.5	1.437	6.457	6.85	6.26	2.125	4	5.157	2.25	0.708	0.875	2.25	1.575	0.771	3.5
143/5T	5.5	1.437	6.457	6.85	6.26	2.125	4.000/5.000	6.142	2.25	0.708	0.875	2.25	1.575	0.771	3.5
145T	5.5	1.437	6.457	6.85	6.26	2.125	5	6.142	2.25	0.708	0.875	2.25	1.575	0.771	3.5
182T	7.5	1.614	8.661	8.504	7.565	2.625	4.5	5.945	2.75	1.22	1.125	2.75	1.969	0.984	4.5
182/4T	7.5	1.614	8.661	8.504	7.565	2.625	4.500/5.500	6.969	2.75	1.22	1.125	2.75	1.969	0.984	4.5
213T	8.5	1.779	9.764	10.669	8.667	3.125	5.5	7.362	3.5	1.22	1.375	3.375	2.48	1.203	5.25
213/5T	8.5	1.779	9.764	10.669	8.667	3.125	5.500/7.000	8.858	3.5	1.22	1.375	3.375	2.48	1.203	5.25
215T	8.5	1.779	9.764	10.669	8.667	3.125	7	8.858	3.5	1.22	1.375	3.375	2.48	1.203	5.25
254T	10	2.539	12.126	12.48	10.483	3.75	8.252	10	4.25	1.85	1.625	4	2.756	1.416	6.25
254/6T	10	2.539	12.126	12.48	10.483	3.75	8.252/10.000	11.732	4.25	1.85	1.625	4	2.756	1.416	6.25
256T	10	2.539	12.126	12.48	10.483	3.75	10	11.732	4.25	1.85	1.625	4	2.756	1.416	6.25
284T	11	3.11	13.78	13.78	11.073	4.375	9.5	11.575	4.75	2.244	1.875	4.622	3.149	1.594	7
284TS	11	3.11	13.78	13.78	11.073	3	9.5	11.575	4.75	2.244	1.625	3.25	2.48	1.416	7
284/6T	11	3.11	13.78	13.78	11.073	4.375	9.500/11.000	13.071	4.75	2.244	1.875	4.622	3.149	1.594	7
284/6TS	11	3.11	13.78	13.78	11.073	3	9.500/11.000	13.071	4.75	2.244	1.625	3.25	2.48	1.416	7
324T	12.5	3.189	15.157	14.961	12.575	5	10.5	13.071	5.25	2.638	2.125	5.25	3.937	1.844	8
324TS	12.5	3.189	15.157	14.961	12.575	3.5	10.5	13.071	5.25	2.638	1.875	3.75	2.756	1.594	8
324/6T	12.5	3.189	15.157	14.961	12.575	5	10.500/12.000	14.567	5.25	2.638	2.125	5.25	3.937	1.844	8
326T	12.5	3.189	15.157	14.961	12.575	5	12	14.567	5.25	2.638	2.125	5.25	3.937	1.844	8
326TS	12.5	3.189	15.157	14.961	12.575	3.5	12	14.567	5.25	2.638	1.875	3.75	2.756	1.594	8
364/5T	14.016	3.15	17.165	17.914	16.016	5.625	11.260/12.244	15.512	5.875	3.189	2.375	5.874	4.33	2.019	9
364/5TS	14.016	3.15	17.165	17.914	16.016	3.5	11.260/12.244	15.512	5.875	3.189	1.875	3.748	1.968	1.591	9
404/5T	15.984	3.937	19.921	19.134	16.016	7	12.244/13.740	18.386	6.625	3.189	2.875	7.25	5.512	2.449	10
404/5TS	15.984	3.937	19.921	19.134	16.016	4	12.244/13.740	18.386	6.625	3.189	2.125	4.25	2.756	1.842	10
444/5T	18	3.937	21.929	23.583	18.57	8.25	14.500/16.500	20.315	7.5	3.583	3.375	8.5	7.087	2.88	11
444/5TS	18	3.937	21.929	23.583	18.57	4.5	14.500/16.500	20.315	7.5	3.583	2.375	4.75	3	2.021	11
445/7T	18	3.937	21.929	23.583	20.559	8.25	16.500/20.000	23.897	7.5	3.583	3.375	8.5	7.087	2.88	11
445/7TS	18	3.937	21.929	23.583	20.559	4.5	16.500/20.000	23.897	7.5	3.583	2.375	4.75	3	2.021	11
447/9T	18	3.937	21.929	23.583	20.559	8.25	20.000/25.000	31.535	7.5	3.583	3.375	8.5	7.087	2.88	11
447/9TS	18	3.937	21.929	23.583	20.559	4.5	20.000/25.000	31.535	7.5	3.583	2.375	4.75	3	2.021	11
L447/9T	18	3.937	21.929	25.866	23.72	8.25	20.000/25.000	31.535	7.5	3.583	3.375	8.5	7.087	2.88	11
L447/9TS	18	3.937	21.929	25.866	23.72	4.5	20.000/25.000	31.535	7.5	3.583	2.375	4.75	3	2.021	11
504/5T	20	4.724	24.724	25.866	20.599	10.375	16.000/18.000	24.449	8.5	3.583	3.625	10.63	8.661	3.134	12.5
504/5TS	20	4.724	24.724	25.866	20.599	4.5	16.000/18.000	24.449	8.5	3.583	2.375	4.75	3	2.021	12.5
586/7T	23	5.512	29.528	28.977	23.189	11.375	22.000/25.000	29.921	10	3.583	3.875	11.625	8.661	3.312	14.5
586/7TS	23	5.512	29.528	28.977	23.189	4.5	22.000/25.000	29.921	10	3.583	2.375	4.75	3	2.021	14.5
588/9T	23	5.512	29.528	28.977	27.44	11.375	28.000/32.000	37.98	10	3.583	3.875	11.625	8.661	3.312	14.5
588/9TS	23	5.512	29.528	28.977	27.44	4.5	28.000/32.000	37.98	10	3.583	2.375	4.75	3	2.021	14.5

continued on next page

Data subject to change without notice.

Cooling Tower Motors - Three Phase - TEAO - *continued*

Frame	G	HB	O	HF	HH	HK	Hole H	C	LL	LM	S	AA	T	DE	NDE
143T	0.354	1.787	7.122	3.5	4.25	2.638	0.344	12.353	4.528	4.094	0.187	NPT 3/4”		6205 2RS	6204 2RS
143/5T	0.354	1.787	7.122	3.5	4.75	2.638	0.344	13.338	4.528	4.094	0.187	NPT 3/4”		6205 2RS	6204 2RS
145T	0.354	1.787	7.122	3.5	4.75	2.638	0.344	13.338	4.528	4.094	0.187	NPT 3/4”		6205 2RS	6204 2RS
182T	0.394	2.236	9.343	4.5	5	3.15	0.406	14.298	5.512	5.236	0.25	NPT 1”	1.772	6207 2RS	6206 2RS
182/4T	0.394	2.236	9.343	4.5	5.5	3.15	0.406	15.298	5.512	5.236	0.25	NPT 1”	1.772	6207 2RS	6206 2RS
213T	0.669	2.985	10.508	5.25	6.25	3.15	0.406	17.239	5.512	5.236	0.313	NPT 1”	2.105	6308 2RS	6207 2RS
213/5T	0.669	2.985	10.508	5.25	7	3.15	0.406	18.739	5.512	5.236	0.313	NPT 1”	2.105	6308 2RS	6207 2RS
215T	0.669	2.985	10.508	5.25	7	3.15	0.406	18.739	5.512	5.236	0.313	NPT 1”	2.105	6308 2RS	6207 2RS
254T	0.827	3.061	12.598	6.565	8.376	3.976	0.531	21.594	7.815	7.48	0.375	NPT 1 1/2”	2.087	6309 2RS-C3	6209 2RS-C3
254/6T	0.827	3.061	12.598	6.565	9.25	3.976	0.531	23.343	7.815	7.48	0.375	NPT 1 1/2”	2.087	6309 2RS-C3	6209 2RS-C3
256T	0.827	3.061	12.598	6.565	9.25	3.976	0.531	23.343	7.815	7.48	0.375	NPT 1 1/2”	2.087	6309 2RS-C3	6209 2RS-C3
284T	1.023	3.535	14.067	7	9.5	3.976	0.531	25.418	7.815	7.48	0.5	NPT 1 1/2”	2.087	6311 2RS-C3	6211 2RS-C3
284TS	1.023	3.535	14.067	7	9.5	3.976	0.531	24.043	7.815	7.48	0.375	NPT 1 1/2”	2.087	6311 2RS-C3	6211 2RS-C3
284/6T	1.023	3.535	14.067	7	10.25	3.976	0.531	26.918	7.815	7.48	0.5	NPT 1 1/2”	2.087	6311 2RS-C3	6211 2RS-C3
284/6TS	1.023	3.535	14.067	7	10.25	3.976	0.531	25.543	7.815	7.48	0.375	NPT 1 1/2”	2.087	6311 2RS-C3	6211 2RS-C3
324T	1.3	4.811	15.953	8.708	10.5	4.705	0.657	28.575	9.055	8.661	0.5	NPT 2”	2.441	6312 2RS-C3	6212 2RS-C3
324TS	1.3	4.811	15.953	8.708	10.5	4.705	0.657	27.075	9.055	8.661	0.5	NPT 2”	2.441	6312 2RS-C3	6212 2RS-C3
324/6T	1.3	4.811	15.953	8.708	11.25	4.705	0.657	30.071	9.055	8.661	0.5	NPT 2”	2.441		
326T	1.3	4.811	15.953	8.708	11.25	4.705	0.657	30.071	9.055	8.661	0.5	NPT 2”	2.441	6312 2RS-C3	6212 2RS-C3
326TS	1.3	4.811	15.953	8.708	11.25	4.705	0.657	28.571	9.055	8.661	0.5	NPT 2”	2.441	6312 2RS-C3	6212 2RS-C3
364/5T	1.48	4.251	17.957		11.988	6.024	0.66	29.39	10.591	11.267	0.625	NPT 3”	3.578	6314 2RS-C3	6314 2RS-C3
364/5TS	1.48	4.251	17.957		11.988	6.024	0.66	30.319	10.591	11.267	0.5	NPT 3”	3.578	6314 C3	6314 C3
404/5T	1.811	5.252	19.566		13.496	6.024	0.81	36.415	10.591	11.267	0.75	NPT 3”	3.544	6316 2RS-C3	6314 2RS-C3
404/5TS	1.811	5.252	19.566		13.496	6.024	0.81	33.415	10.591	11.267	0.5	NPT 3”	3.544	6314 C3	6314 C3
444/5T	1.63	5.687	22.795		15.748	5.97	0.81	39.878	12.362	12.283	0.875	2xNPT 3”		6319 C3	6316 C3
444/5TS	1.63	5.687	22.795		15.748	5.97	0.81	36.128	12.362	12.283	0.625	2xNPT 3”		6314 C3	6314 C3
445/7T	1.654	12.488	22.795	20.724	11.811	6.929	0.81	43.382	14.921	15.039	0.875	2xNPT 3”	4.732	6319 C3	6316 C3
445/7TS	1.654	12.488	22.795	20.724	11.811	6.929	0.81	39.592	14.921	15.039	0.625	2xNPT 3”	4.732	6314 C3	6314 C3
447/9T	1.63	12.488	22.795	20.724	11.811	6.929	0.81	51.137	14.921	15.039	0.875	2xNPT 3”	4.732	6322 C3	6319 C3
447/9TS	1.63	12.488	22.795	20.724	11.811	6.929	0.81	47.23	14.921	15.039	0.625	2xNPT 3”	4.732	6314 C3	6314 C3
L447/9T	1.63	11.535	23.874	20.551	11.87	8.661	0.81		15.906	17.165	0.875	2xNPT 3”	4.826	6322 C3	6319 C3
L447/9TS	1.63	11.535	23.874	20.551	11.87	8.661	0.81		15.906	17.165	0.625	2xNPT 3”	4.826	6314 C3	6314 C3
504/5T	1.87	15.167	25.425	24.291	10.374	6.929	1.25	45.965	14.921	15.039	0.875	2xNPT 3”	4.781	6319 C3	6316 C3
504/5TS	1.87	15.167	25.425	24.291	10.374	6.929	1.25	40.045	14.921	15.039	0.625	2xNPT 3”	4.781	6314 C3	6314 C3
586/7T	2.492	18.575	28.985	26.732	13.346	8.661	1.181	55.247	15.906	17.165	1	2xNPT 3”	6.755	6322 C3	6319 C3
586/7TS	2.492	18.575	28.985	26.732	13.346	8.661	1.181	47.722	15.906	17.165	0.625	2xNPT 3”	6.755	6314 C3	6314 C3
588/9T	2.492	16.338	28.985	26.182	13.346	11.417	1.181		18.11	21.417	1	2xNPT 4”	8.77	6322 C3	6319 C3
588/9TS	2.492	16.338	28.985	26.182	13.346	11.417	1.181		18.11	21.417	0.625	2xNPT 4”	8.77	6314 C3	6314 C3

Drawings found on B-92

Cooling Tower Motors - Three Phase - TEAO - *continued*

Frame 143 to 145

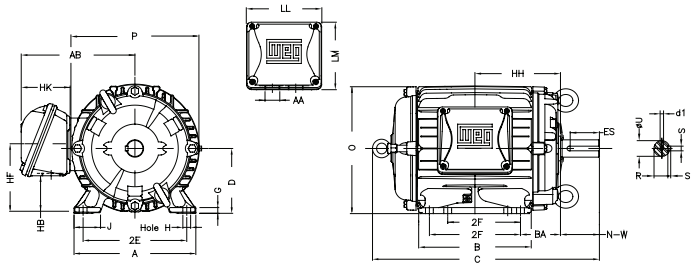

Frame 182 to 213/5

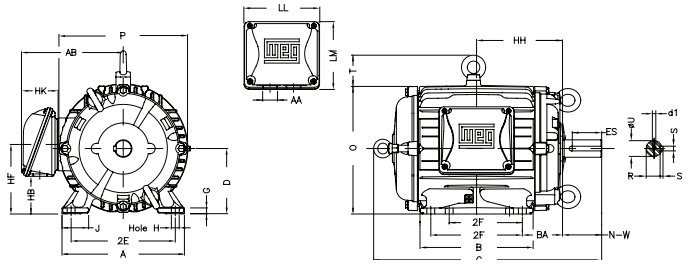

Frames 254 to 326

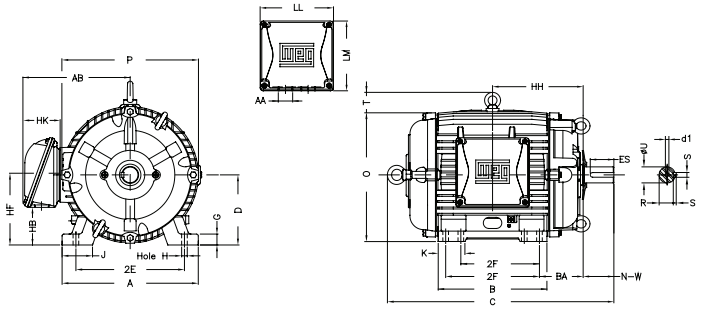

Frames 364 to 445/7

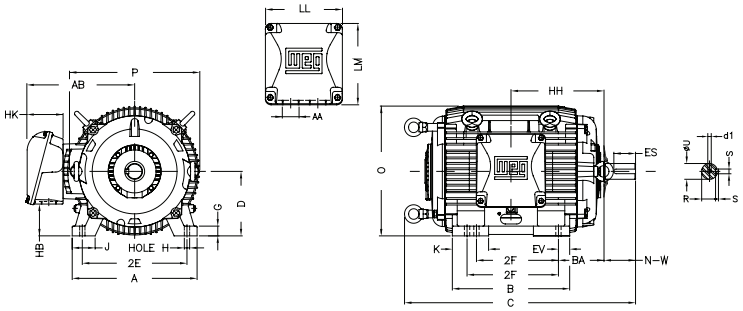

Frame 447/9 to 588/9

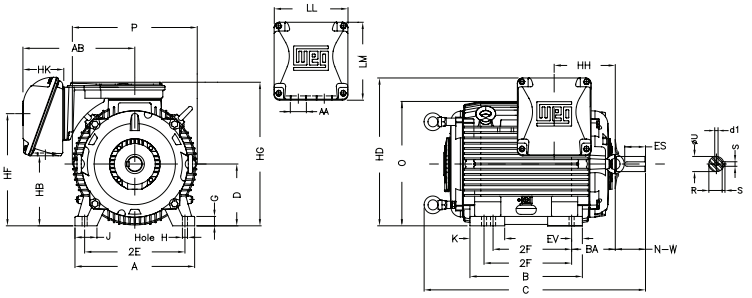

Data subject to change without notice.

CCP - JM - Three Phase - TEFC - Rolled Steel

Frame	2E	J	A	P	AB	AH	2F	B	BA	C	CH	U	EL	EM	EP	EQ
143/5JM	5.5	1.732	6.535	7.638	5.873	4.267	4.000/5.000	6.496	2.75		1.377	0.875	1.156	1	1.179	0.63
182/4JM	7.5	1.299	8.661	9.435	6.696	4.258	4.500/5.500	6.299	3.5		1.377	0.875	1.25	1	1.376	0.63
213/5JM	8.5	1.575	9.449	10.965	7.973	4.258	5.500/7.000	7.953	4.25		1.929	0.875	1.25	1	1.769	0.63
254/6JM	10	1.693	11.417	13.18	9.448	5.25	8.252/10.000	11.417	4.75		1.929	1.249	1.75	1.375	1.769	0.63

Frame	Key Length	ET	R	D	G	HB	O	HD	HK	Hole H	LL	LM	S	AA	T	DE	NDE
143/5JM	1.575	2.88	0.771	3.5	0.12	1.784	6.724	7.327	2.629	0.343	4.563	4.09	0.187	1.118”	0.603	6206 ZZ	6203 ZZ
182/4JM	1.575	2.88	0.771	4.5	0.167	2.784	8.557	9.218	2.629	0.406	4.563	4.09	0.187	1.118”	0.661	6207 ZZ	6205 ZZ
213/5JM	1.575	2.88	0.771	5.25	0.167	2.982	10.144	10.905	3.022	0.406	5.551	5.25	0.187	1.377”	0.761	6209 ZZ	6206 ZZ
254/6JM	2.559	3.006	1.11	6.25	0.187	3.631	12.01	12.84	3.645	0.53	6.299	6.017	0.25	1.732”	0.83	6309 Z-C3	6208 Z-C3

Frame	Type	Flange	Size	AJ	AK	BD	S	T	AH	Angle	BF Number
143/5JM	C	C	FC-149	5.874	4.5	6.45	UNC 3/8”x16	0.157	4.267	45°	4
182/4JM	C	C	FC-149	5.874	4.5	6.496	UNC 3/8”x16	0.157	4.258	45°	4
213/5JM	C	C	FC-184	7.25	8.5	9.401	UNC 1/2”x13	0.25	4.258	45°	4
254/6JM	C	C	FC-184	7.25	8.5	11.084	UNC 1/2”x13	0.25	5.25	45°	4

Frame 143/5JM

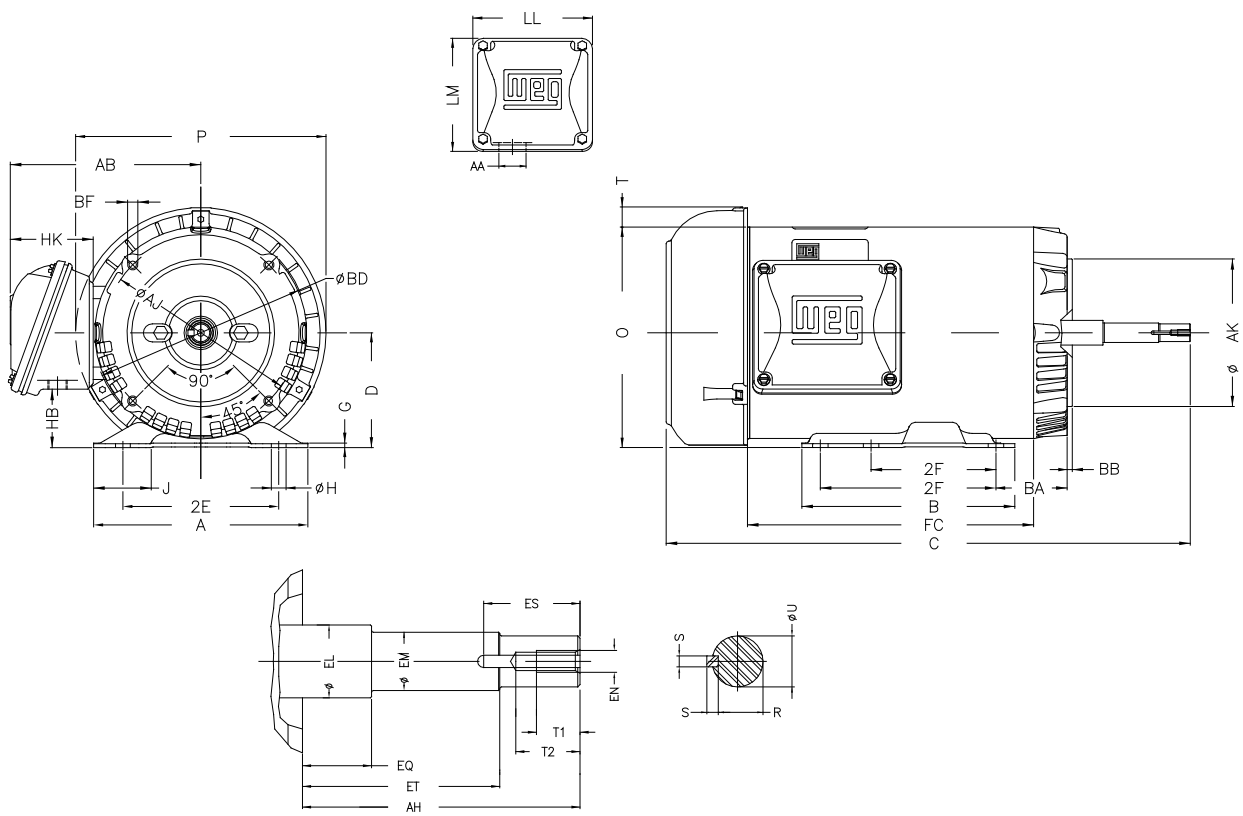

Drawings on next page

CCP - JM - Three Phase - TEFC - Rolled Steel - *continued*

Frame 182/4JM

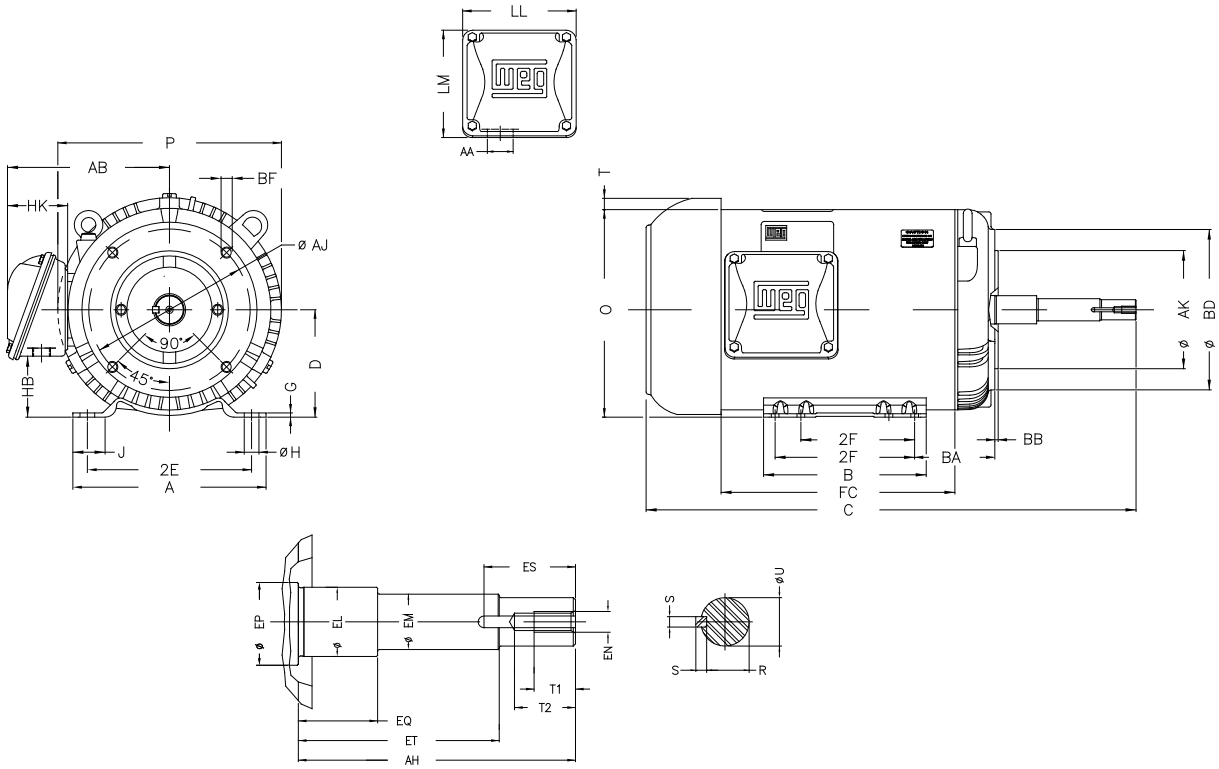

Frames 213/5JM to 254/6JM

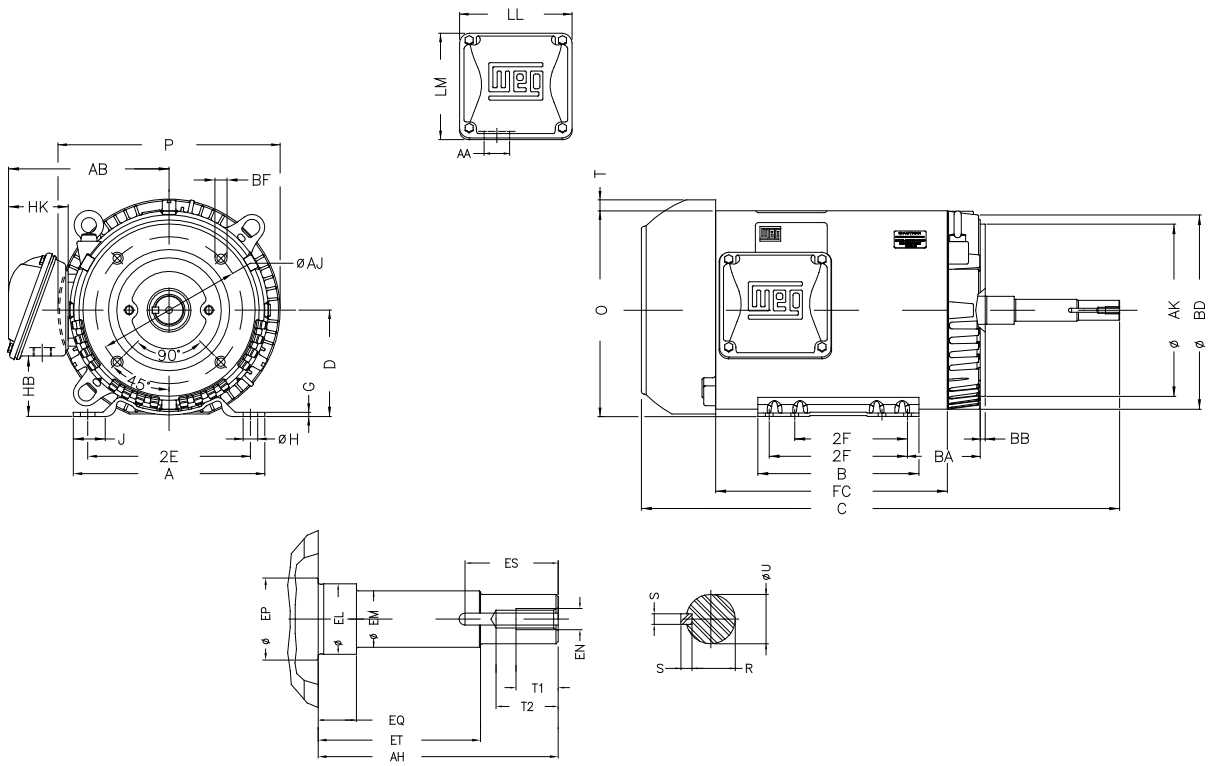

Data subject to change without notice.

CCP - JM - Three Phase - TEFC - Cast Iron

Frame	2E	J	A	P	AB	AH	2F	B	BA	CH	U	d1	EL	EM	EP
143JM	5.5	1.437	6.457	7.047	6.26	4.258	4	5.157	2.56	0.719	0.874	EUNC 3/8”-16	1.156	1	1.179
143/5JM	5.5	1.437	6.457	7.047	6.26	4.258	4.000/5.000	6.142	2.56	0.719	0.874	EUNC 3/8”-16	1.156	1	1.179
145JM	5.5	1.437	6.457	7.047	6.26	4.258	5	6.142	2.56	0.719	0.874	EUNC 3/8”-16	1.156	1	1.179
182JM	7.5	1.614	8.661	8.74	7.565	4.258	4.5	5.945	2.75	1.337	0.874	EUNC 3/8”-16	1.25	1	1.376
184JM	7.5	1.614	8.661	8.74	7.565	4.258	5.5	6.969	2.75	1.337	0.874	EUNC 3/8”-16	1.25	1	1.376
182/4JM	7.5	1.614	8.661	8.74	7.565	4.258	4.500/5.500	6.969	2.75	1.337	0.874	EUNC 3/8”-16	1.25	1	1.376
213JM	8.5	1.779	9.764	10.669	8.606	4.258	5.5	7.362	3.5	1.22	0.874	EUNC 3/8”-16	1.25	1	1.77
213/5JM	8.5	1.779	9.764	10.669	8.606	4.258	5.500/7.000	8.858	3.5	1.22	0.874	EUNC 3/8”-16	1.25	1	1.77
215JM	8.5	1.779	9.764	10.669	8.606	4.258	7	8.858	3.5	1.22	0.874	EUNC 3/8”-16	1.25	1	1.77
254JM	10	2.539	12.126	12.953	10.483	5.25	8.252	10	4.25	1.85	1.249	EUNC 1/2”-13	1.75	1.375	1.75
254JM	10	2.539	12.126	12.953	10.483	5.25	8.252	10	4.25	1.85	1.249	EUNC 1/2”-13	1.75	1.375	1.75
256JM	10	2.539	12.126	12.953	10.483	5.25	10	11.732	4.25	1.85	1.249	EUNC 1/2”-13	1.75	1.375	1.75
254/6JM	10	2.539	12.126	12.953	10.483	5.25	8.252/10.000	11.732	4.25	1.85	1.249	EUNC 1/2”-13	1.75	1.375	1.75
284JM	11	3.11	13.78	14.173	11.073	5.25	9.5	11.575	4.75	2.244	1.249	EUNC 1/2”-13	1.75	1.375	2.163
284/6JM	11	3.11	13.78	14.173	11.073	5.25	9.500/11.000	13.071	4.75	2.244	1.249	EUNC 1/2”-13	1.75	1.375	2.163
286JM	11	3.11	13.78	14.173	11.073	5.25	11	13.071	4.75	2.244	1.249	EUNC 1/2”-13	1.75	1.375	2.163
324JM	12.5	3.189	15.157	15.827	12.575	5.25	10.5	13.071	5.25	2.638	1.249	EUNC 1/2”-13	1.75	1.375	2.36
324/6JM	12.5	3.189	15.157	15.827	12.575	5.25	10.500/12.000	14.567	5.25	2.638	1.249	EUNC 1/2”-13	1.75	1.375	2.36
326JM	12.5	3.189	15.157	15.827	12.575	5.25	12	14.567	5.25	2.638	1.249	EUNC 1/2”-13	1.75	1.375	2.36
364/5JM	14.016	3.15	17.165	17.914	16.016	5.25	11.260/12.244	15.512	5.875	3.189	1.249	EUNC 1/2”-13	1.75	1.375	2.756

Frame	EQ	ET	R	D	HB	O	HH	HK	Hole H	C	LL	LM	S	T	DE	NDE
143JM	0.63	2.88	0.768	3.5	1.787	7.122	4.25	2.638	0.344	14.691	4.528	4.094	0.187		6206 ZZ	6204 ZZ
143/5JM	0.63	2.88	0.767	3.5	1.787	7.122	4.75	2.638	0.344	15.675	4.528	4.094	0.187		6206 ZZ	6204 ZZ
145JM	0.63	2.88	0.767	3.5	1.787	7.122	4.75	2.638	0.344	15.675	4.528	4.094	0.187		6206 ZZ	6204 ZZ
182JM	0.63	2.88	0.768	4.5	2.236	9.343	5	3.15	0.406	16.412	5.512	5.236	0.187	1.772	6307 ZZ	6206 ZZ
184JM	0.63	2.88	0.768	4.5	2.236	9.343	5.5	3.15	0.406	17.411	5.512	5.236	0.187	1.772	6307 ZZ	6206 ZZ
182/4JM	0.63	2.88	0.768	4.5	2.236	9.343	5.5	3.15	0.406	17.411	5.512	5.236	0.187	1.772	6307 ZZ	6206 ZZ
213JM	0.63	2.88	0.768	5.25	2.985	10.508	6.25	3.15	0.406	18.852	5.512	5.236	0.187	2.105	6309 Z-C3	6207 ZZ
213/5JM	0.63	2.88	0.768	5.25	2.985	10.508	7	3.15	0.406	20.392	5.512	5.236	0.187	2.105	6309 Z-C3	6207 ZZ
215JM	0.63	2.88	0.768	5.25	2.985	10.508	7	3.15	0.406	20.392	5.512	5.236	0.187	2.105	6309 Z-C3	6207 ZZ
254JM	0.63	3.006	1.11	6.25	3.061	12.598	8.376	3.976	0.531	24.478	7.815	7.48	0.25	2.087	6309 C3	6209 C3
254JM	0.63	3.006	1.11	6.25	3.061	12.598	8.376	3.976	0.531	24.478	7.815	7.48	0.25	2.087	6309 C3	6209 C3
256JM	0.63	3.006	1.11	6.25	3.061	12.598	9.25	3.976	0.531	26.226	7.815	7.48	0.25	2.087	6309 C3	6209 C3
254/6JM	0.63	3.006	1.11	6.25	3.061	12.598	9.25	3.976	0.531	26.226	7.815	7.48	0.25	2.087	6309 C3	6209 C3
284JM	0.63	3.006	1.11	7	3.535	14.067	9.5	3.976	0.531	27.165	7.815	7.48	0.25	2.087	6311 C3	6211 C3
284/6JM	0.63	3.006	1.11	7	3.535	14.067	10.25	3.976	0.531	28.7	7.815	7.48	0.25	2.087	6311 C3	6211 C3
286JM	0.63	3.006	1.11	7	3.535	14.067	10.25	3.976	0.531	28.7	7.815	7.48	0.25	2.087	6311 C3	6211 C3
324JM	0.63	3.006	1.11	8	4.811	15.953	10.5	4.705	0.657	28.149	9.055	8.661	0.25	2.441	6312 C3	6212 C3
324/6JM	0.63	3.006	1.11	8	4.811	15.953	11.25	4.705	0.657	29.645	9.055	8.661	0.25	2.441	6312 C3	6212 C3
326JM	0.63	3.006	1.11	8	4.811	15.953	11.25	4.705	0.657	29.645	9.055	8.661	0.25	2.441	6312 C3	6212 C3
364/5JM	0.63	3.006	1.11	9	4.251	17.716	11.988	6.024	0.66	33.832	10.591	11.267	0.25	3.819	6314 C3	6314 C3

continued on next page

CCP - JM - Three Phase - TEFC - Cast Iron - *continued*

Frame	Type	Flange	Size	AJ	AK	BD	S	T	AH	Angle	BF Number
143JM	C	C	FC-149	5.874	4.5	6.496	UNC 3/8”x16	0.157	4.258	45°	4
145JM	C	C	FC-149	5.874	4.5	6.496	UNC 3/8”x16	0.157	4.258	45°	4
143/5JM	C	C	FC-149	5.874	4.5	6.496	UNC 3/8”x16	0.157	4.258	45°	4
182JM	C	C	FC-149	5.874	4.5	6.496	UNC 3/8”x16	0.157	4.258	45°	4
184JM	C	C	FC-149	5.874	4.5	6.496	UNC 3/8”x16	0.157	4.258	45°	4
182/4JM	C	C	FC-149	5.874	4.5	6.496	UNC 3/8”x16	0.157	4.258	45°	4
213JM	C	C	FC-184	7.252	8.5	8.858	UNC 1/2”x13	0.248	4.258	45°	4
213/5JM	C	C	FC-184	7.252	8.5	8.858	UNC 1/2”x13	0.248	4.258	45°	4
215JM	C	C	FC-184	7.252	8.5	8.858	UNC 1/2”x13	0.248	4.258	45°	4
254JM	C	C	FC-184	7.252	8.5	8.858	UNC 1/2”x13	0.248	5.25	45°	4
256JM	C	C	FC-184	7.252	8.5	8.858	UNC 1/2”x13	0.248	5.25	45°	4
254/6JM	C	C	FC-184	7.252	8.5	8.858	UNC 1/2”x13	0.248	5.25	45°	4
284JM	C	C	FC-279	11	12.5	13.593	UNC 5/8”x11	0.248	5.25	45°	4
286JM	C	C	FC-279	11	12.5	13.593	UNC 5/8”x11	0.248	5.25	45°	4
284/6JM	C	C	FC-279	11	12.5	13.593	UNC 5/8”x11	0.248	5.25	45°	4
324JM	C	C	FC-279	11	12.5	13.593	UNC 5/8”x11	0.248	5.25	45°	4
326JM	C	C	FC-279	11	12.5	13.593	UNC 5/8”x11	0.248	5.25	45°	4
324/6JM	C	C	FC-279	11	12.5	13.593	UNC 5/8”x11	0.248	5.25	45°	4
364/5JM	C	C	FC-279	11	12.5	15.562	UNC 5/8”x11	0.248	5.25	45°	8

Frames 143JM to 215JM

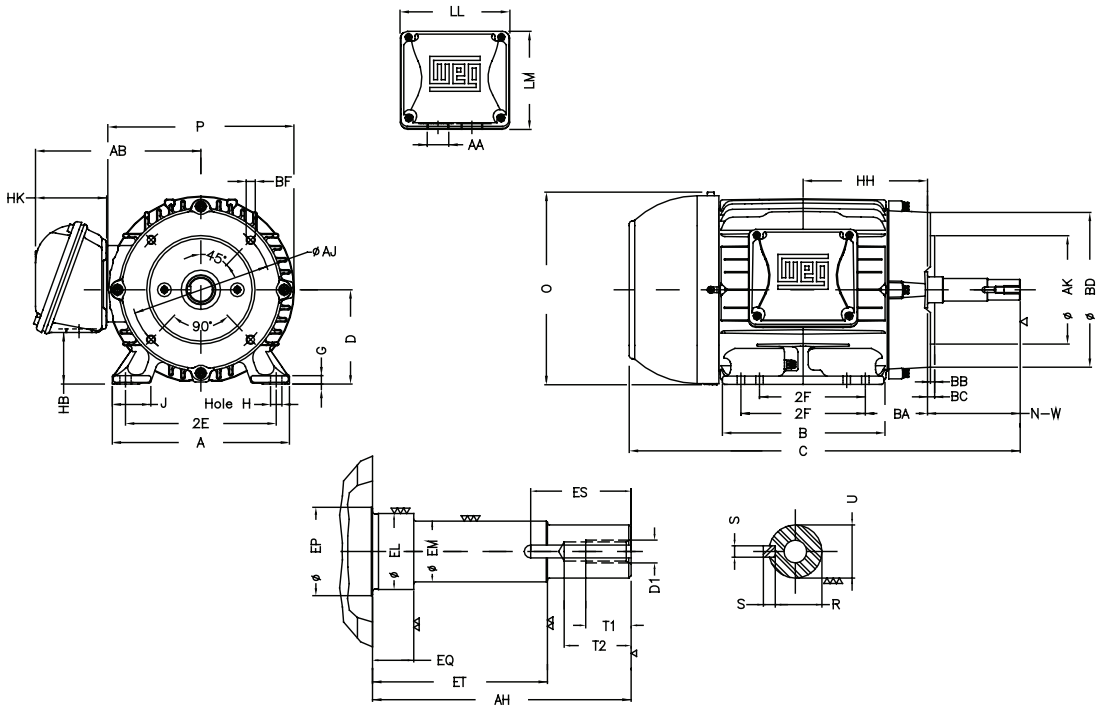

Data subject to change without notice.

Frames 254JM to 326JM

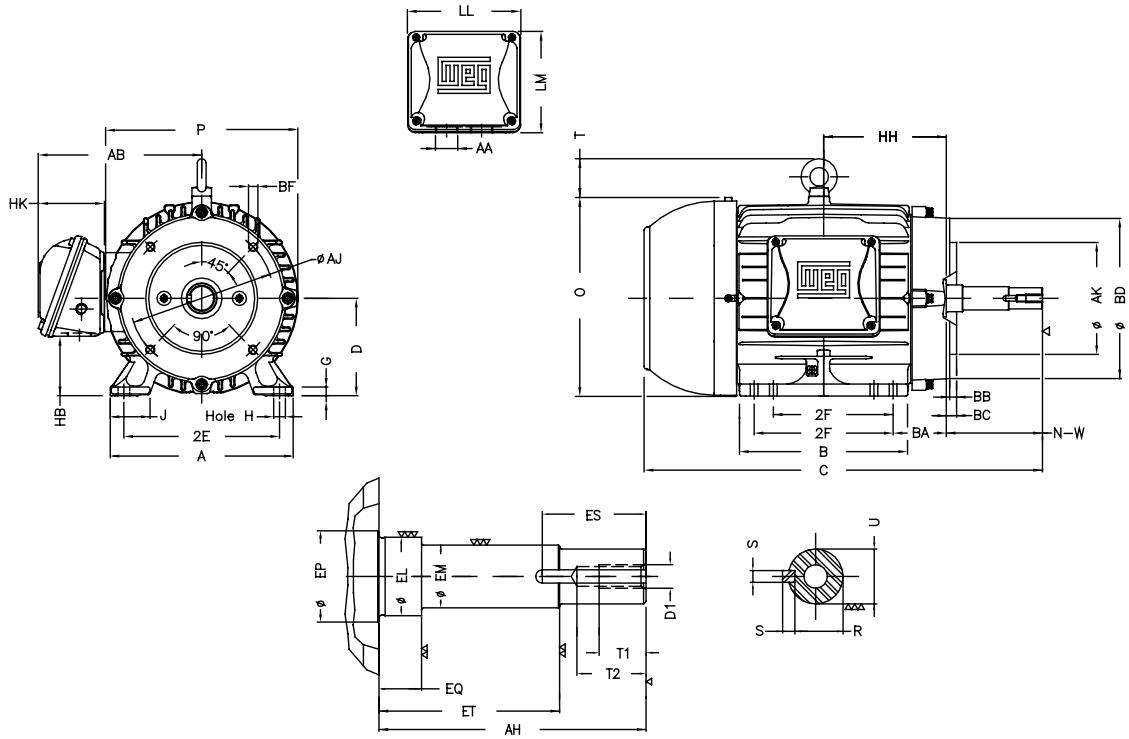

Frame 364/5JM

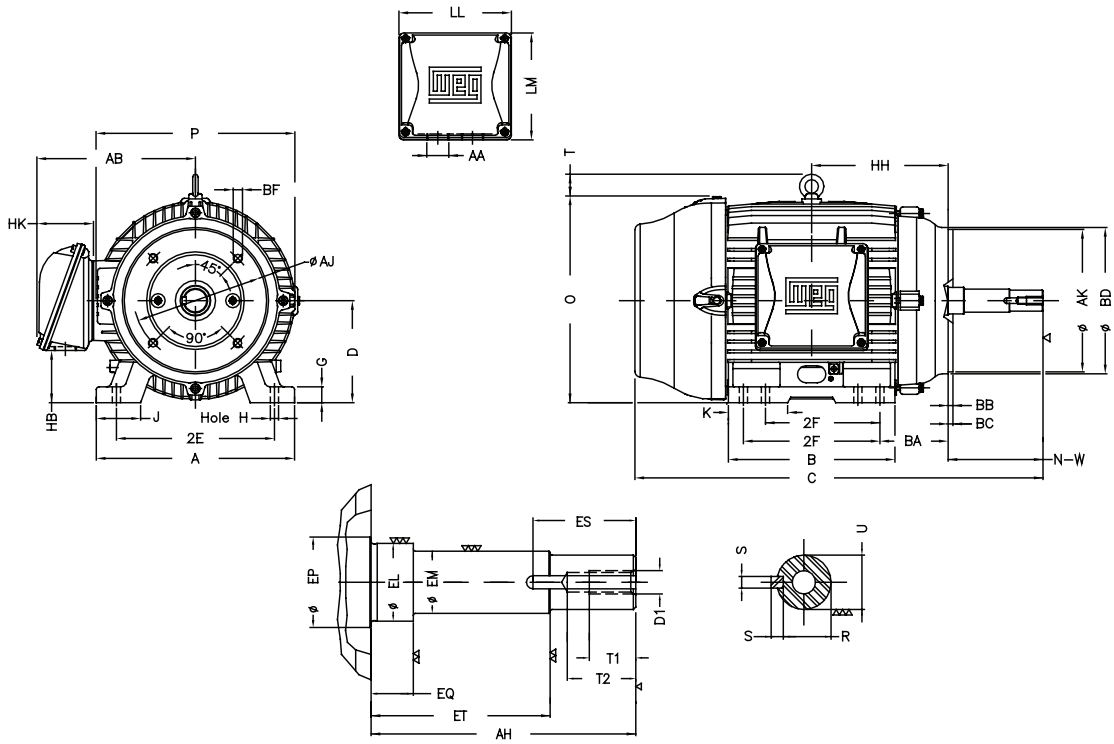

CCP - JP - Three Phase - TEFC - Rolled Steel

Frame	2E	J	A	P	AB	AH	2F	B	BA	CH	U	d1	EL	EM.	EP
143/5JP	5.5	1.732	6.535	7.638	5.873	7.319	4.000/5.000	6.496	2.75	1.377	0.875	EUNC 3/8”-16	1.156	1	1.179
182/4JP	7.5	1.299	8.661	9.435	6.696	7.319	4.500/5.500	6.299	3.5	1.377	0.875	EUNC 3/8”-16	1.25	1	1.376
213/5JP	8.5	1.575	9.449	10.965	7.973	8.13	5.500/7.000	7.953	4.25	1.929	1.25	EUNC 1/2”-13	1.75	1.375	1.769
254/6JP	10	1.693	11.417	13.18	9.448	8.13	8.252/10.000	11.417	4.75	1.929	1.249	EUNC 1/2”-13	1.75	1.375	1.769

Frame	Key Length	ET	Width	R	D	G	HB	O	HK	Hole H	LL	LM	S	AA	T	DE	NDE
143/5JP	1.654	5.941	0.187	0.771	3.5	0.12	1.784	6.724	2.629	0.343	4.563	4.09	0.187	1.118”	0.603	6206 ZZ	6203 ZZ
182/4JP	1.654	5.941	0.187	0.771	4.5	0.167	2.784	8.557	2.629	0.406	4.563	4.09	0.187	1.118”	0.661	6207 ZZ	6205 ZZ
213/5JP	2.56	5.886	0.25	1.11	5.25	0.167	2.982	10.144	3.022	0.406	5.551	5.25	0.25	1.377”	0.761	6209 ZZ	6206 ZZ
254/6JP	2.559	5.886	0.25	1.11	6.25	0.187	3.631	12.01	3.645	0.53	6.299	6.017	0.25	1.732”	0.83	6309 Z-C3	6208 Z-C3

Frame	Type	Flange	Size	BB	AJ	AK	BD	S	T	AH	Angle	BF Number
143/5JP	C	C	FC-149	0.157	5.874	4.5	6.45	UNC 3/8”x16	0.157	7.319	45°	4
182/4JP	C	C	FC-149	0.157	5.874	4.5	6.496	UNC 3/8”x16	0.138	7.319	45°	4
213/5JP	C	C	FC-184	0.25	7.25	8.5	9.401	UNC 1/2”x13	0.25	8.13	45°	4
254/6JP	C	C	FC-184	0.25	7.25	8.5	11.084	UNC 1/2”x13	0.25	8.13	45°	4

Frames 143/5JP

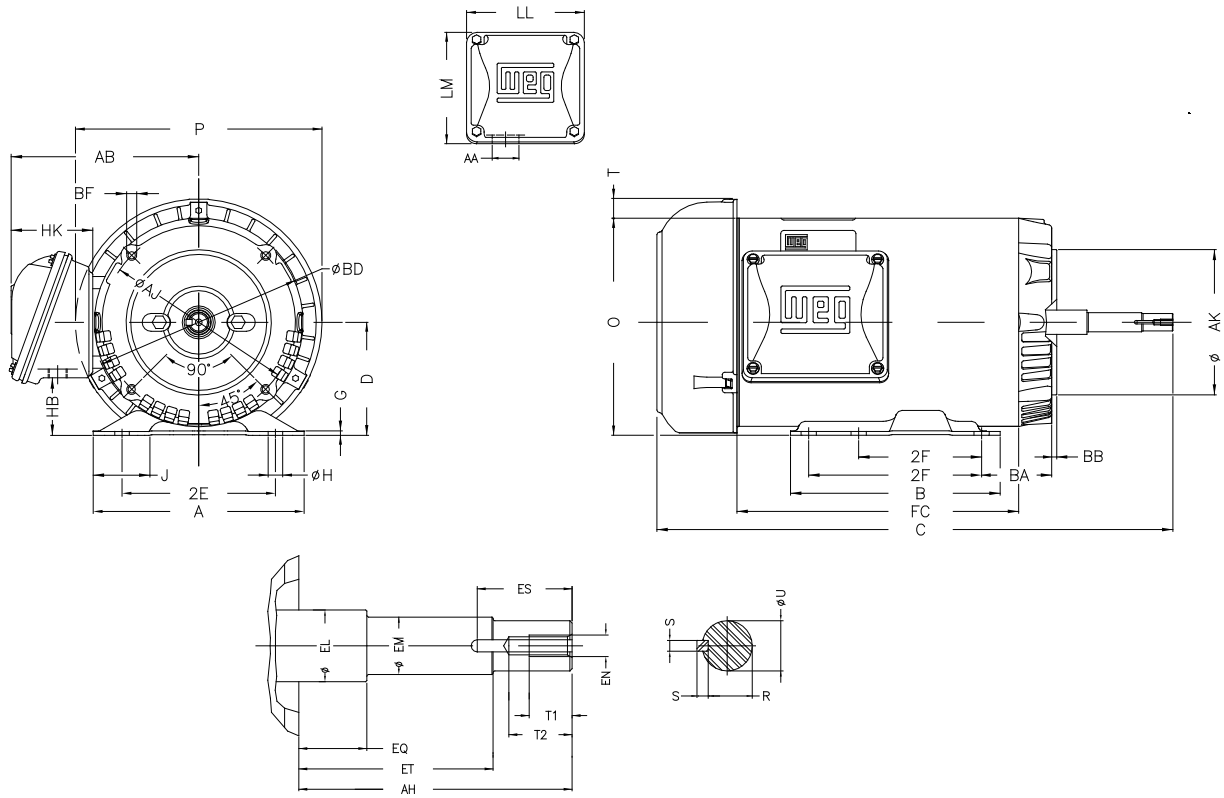

Data subject to change without notice.

CCP - JP - Three Phase - TEFC - Rolled Steel - *continued*

Frames 182/4JP

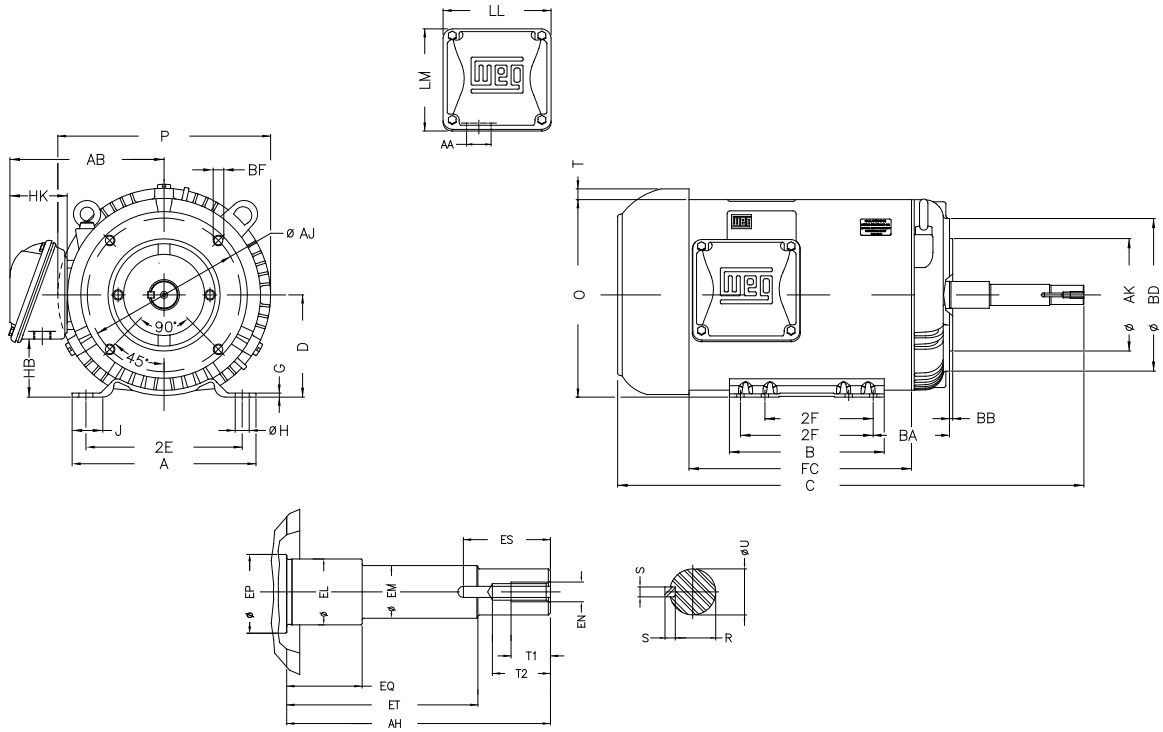

Frames 213-254/6JP

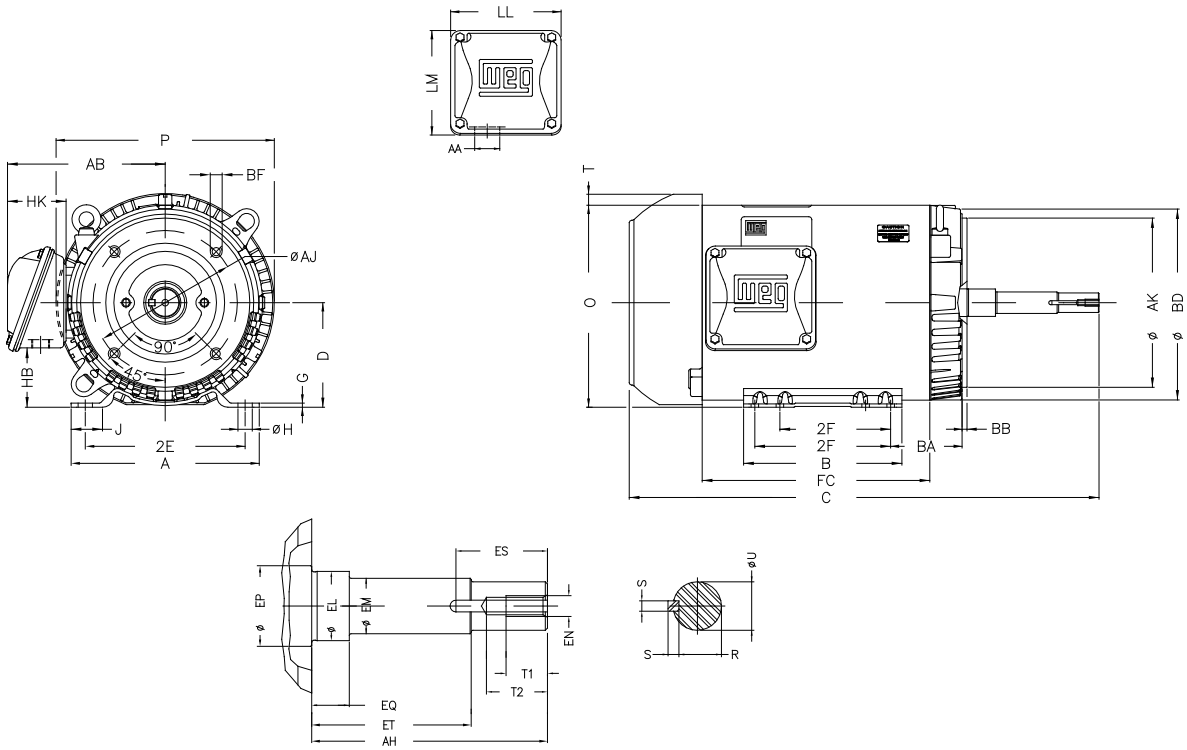

CCP - JP - Three Phase - TEFC - Cast Iron

Frame	2E	J	A	P	AB	AH	2F	B	BA	CH	U	EL	EM	EP	EQ	Key Length
143JP	5.5	1.437	6.457	7.047	6.26	7.319	4	5.157	2.56	0.719	0.874	1.156	1	1.179	1.563	1.654
143/5JP	5.5	1.437	6.457	7.047	6.26	7.319	4.000/5.000	6.142	2.56	0.719	0.874	1.156	1	1.179	1.563	1.654
145JP	5.5	1.437	6.457	7.047	6.26	7.319	5	6.142	2.56	0.719	0.874	1.156	1	1.179	1.563	1.654
182JP	7.5	1.614	8.661	8.74	7.565	7.319	4.5	5.945	2.75	1.337	0.874	1.25	1	1.376	1.563	1.575
182/4JP	7.5	1.614	8.661	8.74	7.565	7.319	4.500/5.500	6.969	2.75	1.337	0.874	1.25	1	1.376	1.563	1.575
213JP	8.5	1.779	9.764	10.669	8.606	8.13	5.5	7.362	3.5	1.22	1.249	1.75	1.375	1.77	2.382	2.48
213/5JP	8.5	1.779	9.764	10.669	8.606	8.13	5.500/7.000	8.858	3.5	1.22	1.249	1.75	1.375	1.77	2.382	2.48
215JP	8.5	1.779	9.764	10.669	8.606	8.13	7	8.858	3.5	1.22	1.249	1.75	1.375	1.77	2.382	2.48
254JP	10	2.539	12.126	12.953	10.483	8.13	8.252	10	4.25	1.85	1.249	1.75	1.375	1.77	2.382	2.48
254/6JP	10	2.539	12.126	12.953	10.483	8.13	8.252/10.000	11.732	4.25	1.85	1.249	1.75	1.375	1.77	2.382	2.48
256JP	10	2.539	12.126	12.953	10.483	8.13	10	11.732	4.25	1.85	1.249	1.75	1.375	1.77	2.382	2.48
284JP	11	3.11	13.78	14.173	11.073	8.13	9.5	11.575	4.75	2.244	1.249	1.75	1.375	2.163	2.382	2.48
284/6JP	11	3.11	13.78	14.173	11.073	8.13	9.500/11.000	13.071	4.75	2.244	1.249	1.75	1.375	2.163	2.382	2.48
324JP	12.5	3.189	15.157	15.827	12.575	8.13	10.5	13.071	5.25	2.638	1.249	1.75	1.375	2.36	2.402	2.48
326JP	12.5	3.189	15.157	15.827	12.575	8.13	12	14.567	5.25	2.638	1.249	1.75	1.375	2.36	2.402	2.48
324/6JP	12.5	3.189	15.157	15.827	12.575	8.13	10.500/12.000	14.567	5.25	2.638	1.249	1.75	1.375	2.36	2.402	2.48
364/5JP	14.016	3.15	17.165	17.914	16.016	8.13	11.260/12.244	15.512	5.875	3.189	1.624	2.125	1.75	2.756	2.382	2.48
404/5JP	15.984	3.937	19.921	19.134	16.016	8.13	12.244/13.740	18.386	6.625	3.189	1.624	2.125	1.75	2.756	2.382	2.48

Frame	ET	R	D	G	HB	O	HH	HK	Hole H	C	LL	LM	S	AA	DE	NDE
143JP	5.941	0.768	3.5	0.354	1.787	7.122	4.25	2.638	0.344	17.752	4.528	4.094	0.187	NPT 3/4”	6206 ZZ	6204 ZZ
143/5JP	5.941	0.768	3.5	0.354	1.787	7.122	4.75	2.638	0.344	18.736	4.528	4.094	0.187	NPT 3/4”	6206 ZZ	6204 ZZ
145JP	5.941	0.768	3.5	0.354	1.787	7.122	4.75	2.638	0.344	18.736	4.528	4.094	0.187	NPT 3/4”	6206 ZZ	6204 ZZ
182JP	5.941	0.768	4.5	0.394	2.236	9.343	5	3.15	0.406	19.475	5.512	5.236	0.187	NPT 1”	6307 ZZ	6206 ZZ
182/4JP	5.941	0.768	4.5	0.394	2.236	9.343	5.5	3.15	0.406	20.475	5.512	5.236	0.187	NPT 1”	6307 ZZ	6206 ZZ
213JP	5.886	1.11	5.25	0.669	2.985	10.508	6.25	3.15	0.406	22.804	5.512	5.236	0.25	NPT 1”	6309 Z-C3	6207 ZZ
213/5JP	5.886	1.11	5.25	0.669	2.985	10.508	7	3.15	0.406	24.264	5.512	5.236	0.25	NPT 1”	6309 Z-C3	6207 ZZ
215JP	5.886	1.11	5.25	0.669	2.985	10.508	7	3.15	0.406	24.264	5.512	5.236	0.25	NPT 1”	6309 Z-C3	6207 ZZ
254JP	5.886	1.11	6.25	0.827	3.061	12.598	8.376	3.976	0.531	27.358	7.815	7.48	0.25	NPT 1 1/2”	6309 C3	6209 C3
254/6JP	5.886	1.11	6.25	0.827	3.061	12.598	9.25	3.976	0.531	29.106	7.815	7.48	0.25	NPT 1 1/2”	6309 C3	6209 C3
256JP	5.886	1.11	6.25	0.827	3.061	12.598	9.25	3.976	0.531	29.106	7.815	7.48	0.25	NPT 1 1/2”	6309 C3	6209 C3
284JP	5.886	1.11	7	1.023	3.535	14.067	9.5	3.976	0.531	30.079	7.815	7.48	0.25	NPT 1 1/2”	6311 C3	6211 C3
284/6JP	5.886	1.11	7	1.023	3.535	14.067	10.25	3.976	0.531	31.575	7.815	7.48	0.25	NPT 1 1/2”	6311 C3	6211 C3
324JP	5.906	1.11	8	1.3	4.811	15.953	10.5	4.705	0.657	32.525	9.055	8.661	0.25	NPT 2”	6312 C3	6212 C3
326JP	5.906	1.11	8	1.3	4.811	15.953	11.25	4.705	0.657	34.021	9.055	8.661	0.25	NPT 2”	6312 C3	6212 C3
324/6JP	5.906	1.11	8	1.3	4.811	15.953	11.25	4.705	0.657	34.021	9.055	8.661	0.25	NPT 2”	6312 C3	6212 C3
364/5JP	5.886	1.413	9	1.48	4.251	17.716	11.988	6.024	0.66	35.916	10.591	11.267	0.375	NPT 3”	6314 C3	6314 C3
404/5JP	5.886	1.413	10	1.811	5.252	19.566	13.496	6.024	0.81	38.911	10.591	11.267	0.375	NPT 3”	6314 C3	6314 C3

Data subject to change without notice.

CCP - JP - Three Phase - TEFC - Cast Iron - *continued*

Frame	Type	Flange	Size	AJ	AK	BD	S	T	AH	Angle	BF Number
143JP	C	C	FC-149	5.874	4.5	6.496	UNC 3/8”x16	0.157	7.319	45°	4
143/5JP	C	C	FC-149	5.874	4.5	6.496	UNC 3/8”x16	0.157	7.319	45°	4
145JP	C	C	FC-149	5.874	4.5	6.496	UNC 3/8”x16	0.157	7.319	45°	4
182JP	C	C	FC-149	5.874	4.5	6.496	UNC 3/8”x16	0.157	7.319	45°	4
182/4JP	C	C	FC-149	5.874	4.5	6.496	UNC 3/8”x16	0.157	7.319	45°	4
213JP	C	C	FC-184	7.252	8.5	8.858	UNC 1/2”x13	0.248	8.13	45°	4
213/5JP	C	C	FC-184	7.252	8.5	8.858	UNC 1/2”x13	0.248	8.13	45°	4
215JP	C	C	FC-184	7.252	8.5	8.858	UNC 1/2”x13	0.248	8.13	45°	4
254JP	C	C	FC-184	7.252	8.5	8.858	UNC 1/2”x13	0.248	8.13	45°	4
254/6JP	C	C	FC-184	7.252	8.5	8.858	UNC 1/2”x13	0.248	8.13	45°	4
256JP	C	C	FC-184	7.252	8.5	8.858	UNC 1/2”x13	0.248	8.13	45°	4
284JP	C	C	FC-279	11	12.5	13.593	UNC 5/8”x11	0.248	8.13	45°	4
284/6JP	C	C	FC-279	11	12.5	13.593	UNC 5/8”x11	0.248	8.13	45°	4
324JP	C	C	FC-279	11	12.5	13.593	UNC 5/8”x11	0.248	8.13	45°	4
326JP	C	C	FC-279	11	12.5	13.593	UNC 5/8”x11	0.248	8.13	45°	4
324/6JP	C	C	FC-279	11	12.5	13.593	UNC 5/8”x11	0.248	8.13	45°	4
364/5JP	C	C	FC-279	11	12.5	15.562	UNC 5/8”x11	0.248	8.13	45°	8
404/5JP	C	C	FC-279	11	12.5	15.562	UNC 5/8”x11	0.248	8.13	45°	8

Frames 143JP to 213/5JP

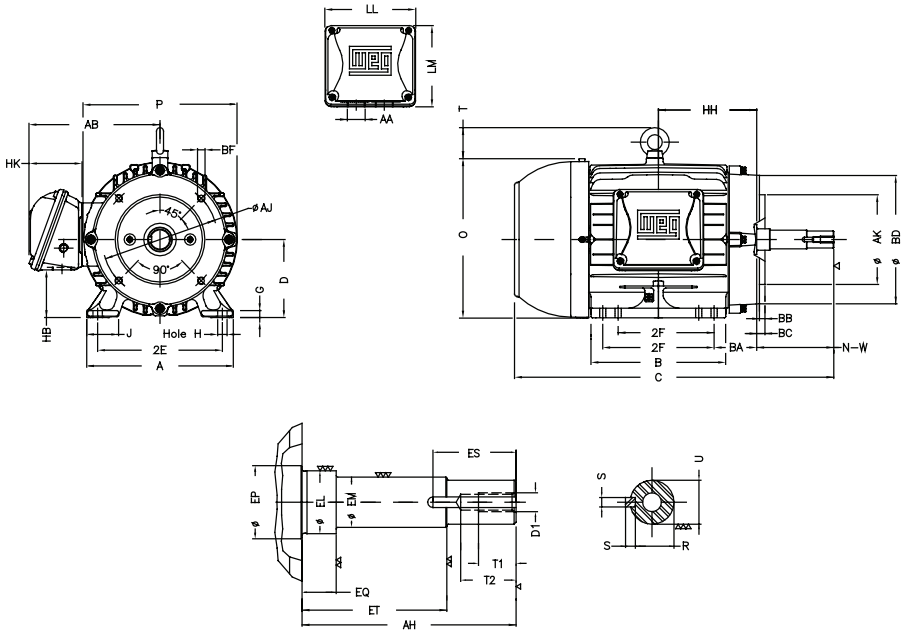

Drawings on next page

CCP - JP - Three Phase - TEFC - Cast Iron - *continued*

Frames 254JP to 326JP

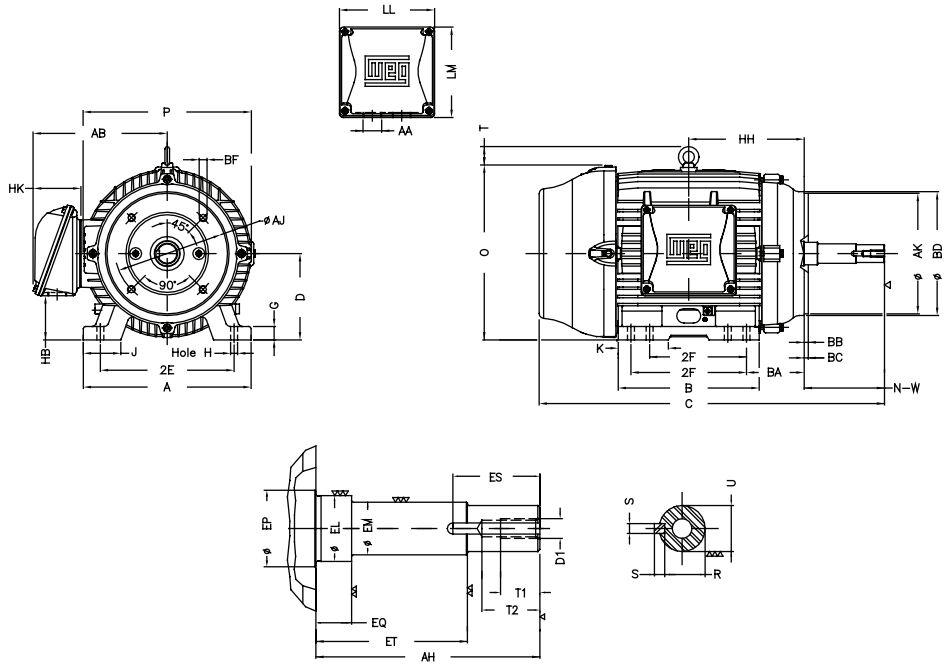

Frames 364/5JP to 404/5JP

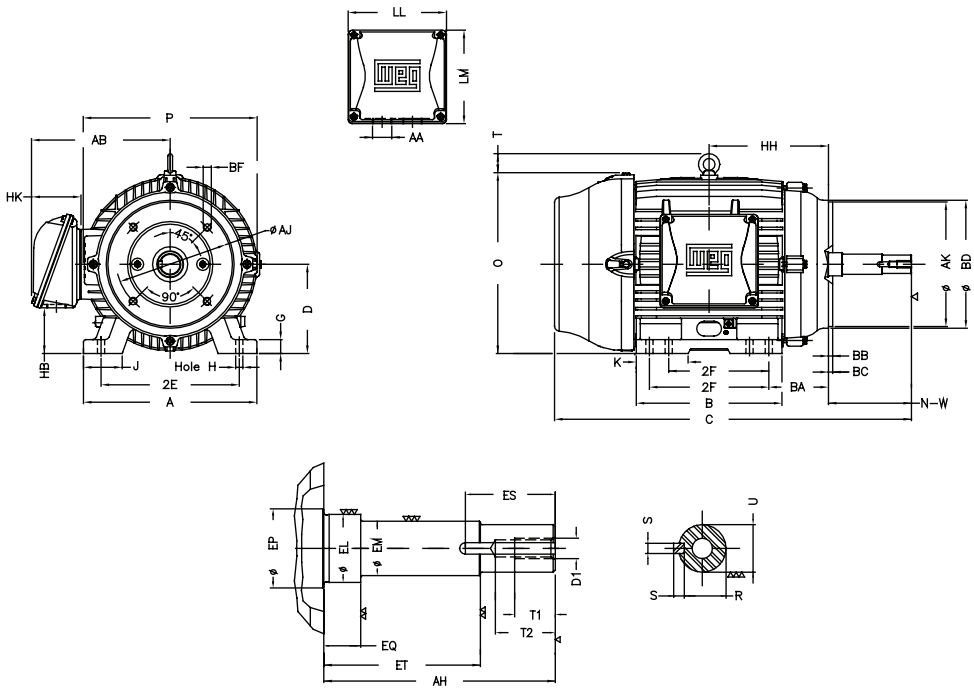

Data subject to change without notice.

CCP - JM - Three Phase - ODP - Rolled Steel

Frame	2E	J	A	P	AB	AH	2F	B	BA	CH	U	EL	EM	EP	EQ
143/5JM	5.5	1.732	6.535	6.467	5.873	4.267	4.000/5.000	6.496	2.75	1.377	0.8745	1.156	1	1.179	0.63
182/4JM	7.5	1.299	8.661	8.114	6.696	4.258	4.500/5.500	6.299	3.5	1.377	0.8745	1.25	1	1.376	0.63
213/5JM	8.5	1.575	9.449	9.846	7.973	4.258	5.500/7.000	7.953	4.25	1.929	0.8745	1.25	1	1.769	0.63
254/6JM	10	1.693	11.417	11.558	9.448	5.25	8.252/10.000	11.417	4.75	1.929	1.249	1.75	1.375	1.769	0.63

Frame	ET	R	D	G	HB	O	HD	HK	Hole H	C	LL	LM	S	AA	DE	NDE
143/5JM	2.88	0.771	3.5	0.12	1.784	6.724	6.728	2.629	0.343		4.563	4.09	0.187	1.118"	6206 ZZ	6203 ZZ
182/4JM	2.88	0.771	4.5	0.167	2.784	8.557	8.557	2.629	0.406		4.563	4.09	0.187	1.118"	6207 ZZ	6205 ZZ
213/5JM	2.88	0.771	5.25	0.167	2.982	10.144	10.173	3.022	0.406		5.551	5.25	0.187	1.377"	6209 ZZ	6206 ZZ
254/6JM	3.006	1.11	6.25	0.187	3.631	12.01	12.029	3.645	0.53		6.299	6.017	0.25	1.732"	6309 Z-C3	6208 Z-C3

Frame	Type	Flange	Size	AJ	AK	BD	S	T	AH	Angle	BF Number
143/5JM	C	C	FC-149	5.874	4.5	6.45	UNC 3/8"x16	0.157	4.267	45°	4
182/4JM	C	C	FC-149	5.874	4.5	6.496	UNC 3/8"x16	0.138	4.258	45°	4
213/5JM	C	C	FC-184	7.25	8.5	9.401	UNC 1/2"x13	0.25	4.258	45°	4
254/6JM	C	C	FC-184	7.25	8.5	11.084	UNC 1/2"x13	0.25	5.25	45°	4

CCP - JP - Three Phase - ODP - Rolled Steel

Frame	2E	J	A	P	AB	AH	2F	B	BA	CH	U	EL	EM	EP	EQ
143/5JP	5.5	1.732	6.535	6.467	5.873	7.319	4.000/5.000	6.496	2.75	1.377	0.875	1.156	1	1.179	1.563
182/4JP	7.5	1.299	8.661	8.114	6.696	7.319	4.500/5.500	6.299	3.5	1.377	0.875	1.25	1	1.376	1.563
213/5JP	8.5	1.575	9.449	9.846	7.973	8.13	5.500/7.000	7.953	4.25	1.929	1.25	1.75	1.375	1.769	2.374
254/6JP	10	1.693	11.417	11.558	9.448	8.13	8.252/10.000	11.417	4.75	1.929	1.249	1.75	1.375	1.769	2.382

Frame	Key Length	ET	R	D	G	HB	O	HD	HK	Hole H	C	LL	LM	S	AA	DE	NDE
143/5JP	1.654	5.941	0.771	3.5	0.12	1.784	6.724	6.728	2.629	0.343	-	4.563	4.09	0.187	1.118”	6206 ZZ	6203 ZZ
182/4JP	1.654	5.941	0.771	4.5	0.167	2.784	8.557	8.557	2.629	0.406	-	4.563	4.09	0.187	1.118”	6207 ZZ	6205 ZZ
213/5JP	2.56	5.886	1.11	5.25	0.167	2.982	10.144	10.173	3.022	0.406	-	5.551	5.25	0.25	1.377”	6209 ZZ	6206 ZZ
254/6JP	2.559	5.886	1.11	6.25	0.187	3.631	12.01	12.029	3.645	0.53		6.299	6.017	0.25	1.732”	6309 Z-C3	6208 Z-C3

Frame	Type	Flange	Size	AJ	AK	BD	S	T	AH	Angle	BF Number
143/5JP	C	C	FC-149	5.874	4.5	6.45	UNC 3/8”x16	0.157	7.319	45°	4
182/4JP	C	C	FC-149	5.874	4.5	6.496	UNC 3/8”x16	0.138	7.319	45°	4
213/5JP	C	C	FC-184	7.25	8.5	9.401	UNC 1/2”x13	0.25	8.13	45°	4
254/6JP	C	C	FC-184	7.25	8.5	11.084	UNC 1/2”x13	0.25	8.13	45°	4

Drawings on next page

CCP - JM and JP - Three Phase - ODP - Rolled Steel - *continued*

Frame 143

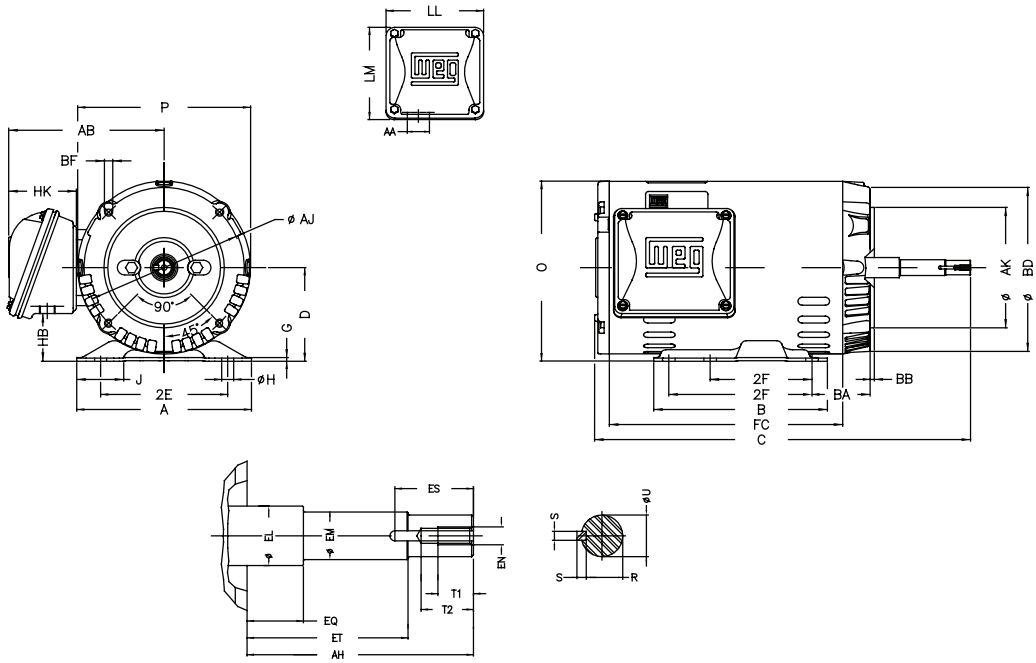

Frame 182

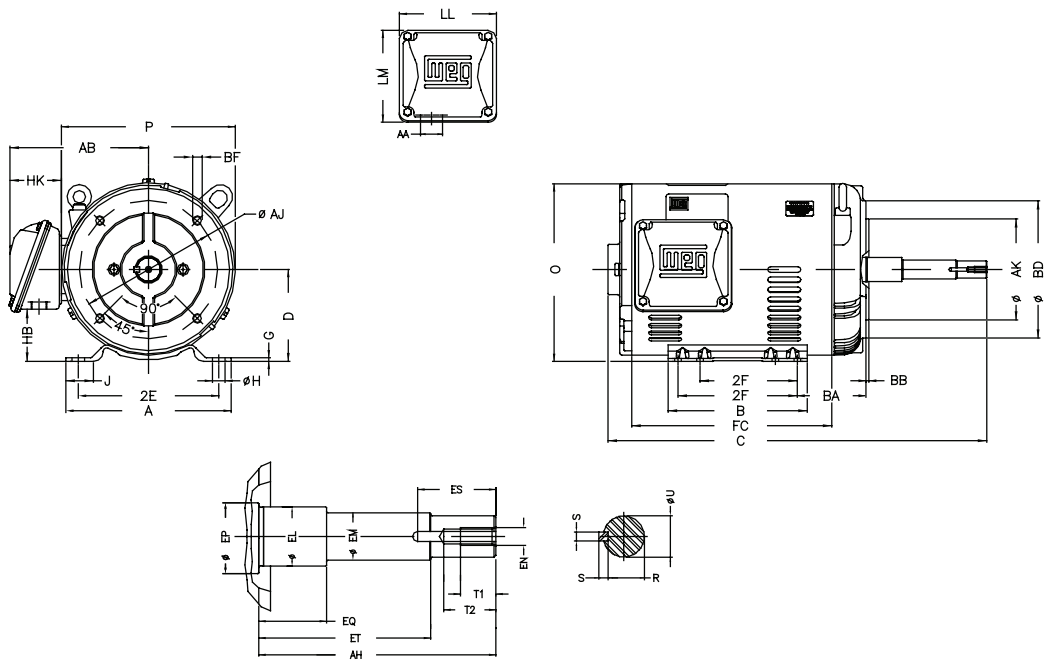

Data subject to change without notice.

CCP - JM and JP - Three Phase - ODP - Rolled Steel - *continued*

Frame 213 to 256

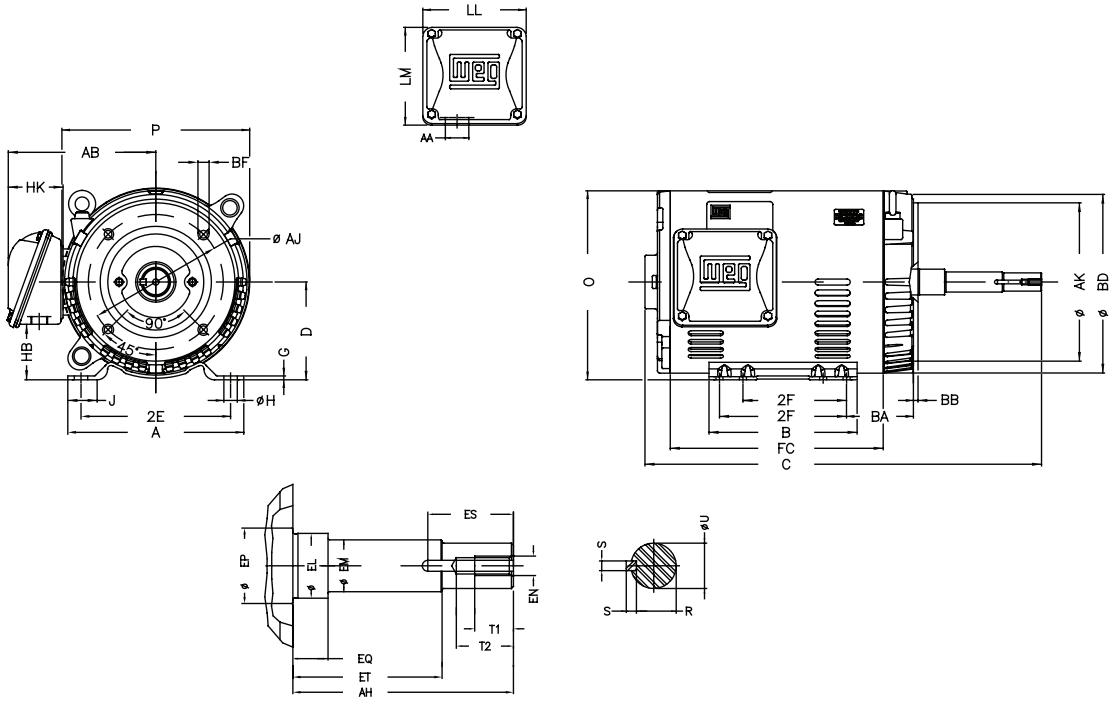

IEC Metric Motors - Cast Iron Frames

Frame	A	AA	AB	AC	AD	B	BB	C	CA	D	D1	D2	DA	E	EA	ES	F
63	100	25.5	116	125	123	80	95	40	78	11j6	EM4	EM3	9j6	23	20	14	4
71	112	28.5	132	141	131	90	113.5	45	88	14j6	DM5	EM4	11j6	30	23	18	5
80	125	30.5	149	159	140	100	125.5	50	93	19j6	DM6	DM4	14j6	40	30	28	6
90S	140	37	164	184	159	100	131	56	135	24j6	DM8	DM6	16j6	50	40	36	8
90L	140	37	164	184	159	125	156	56	135	24j6	DM8	DM6	16j6	50	40	36	8
L90S	140	37	164	184	159	100	131	56	135	24j6	DM8	DM6	16j6	50	40	36	8
L90L	140	37	164	184	159	125	156	56	135	24j6	DM8	DM6	16j6	50	40	36	8
100L	160	40	188	206	169	140	173	63	118	28j6	DM10	DM8	22j6	60	50	45	8
L100L	160	40	188	206	169	140	173	63	162	28j6	DM10	DM8	22j6	60	50	45	8
112M	190	40.5	220	215	192	140	177	70	128	28j6	DM10	DM8	24j6	60	50	45	8
L112M	190	40.5	220	215	192	140	177	70	158	28j6	DM10	DM8	24j6	60	50	45	8
132S	216	45.5	248	274	220	140	187	89	150	38k6	DM12	DM10	28j6	80	60	63	10
132M	216	45.5	248	274	220	178	225	89	150	38k6	DM12	DM10	28j6	80	60	63	10
132M/L	216	45.5	248	274	220	178/203	250	89	150	38k6	DM12	DM10	28j6	80	60	63	10
160M	254	64	308	329	266	210	254	108	174	42k6	DM16	DM16	42k6	110	110	80	12
160L	254	64	308	329	266	254	298	108	174	42k6	DM16	DM16	42k6	110	110	80	12
180M	279	78	350	360	281	241	294	121	200	48k6	DM16	DM16	48k6	110	110	80	14
180L	279	78	350	360	281	279	332	121	200	48k6	DM16	DM16	48k6	110	110	80	14
200L	318	82	385	402	319	305	370	133	222	55m6	DM20	DM20	48k6	110	110	80	16
225S/M	356	80	436	455	410	286/311	412	149	319/294	60m6	DM20	DM20	60m6	140	140	125	18
250S/M	406	100	506	486	410	311/349	467	168	354/316	65m6	DM20	DM20	60m6	140	140	125	18
280S/M	457	100	557	599	445	368/419	517	190	385/334	75m6	DM20	DM20	65m6	140	140	125	20
315S/M	508	120	630	657	525	406/457	621	216	443	80m6	DM20	DM20	65m6	170	140	160	22
315L	508	120	630	657	589	508	752	216	502	80m6	DM20	DM20	65m6	170	140	160	22
355M/L	610	140	750	736	609	560/630	760	254	483/413	100m6	DM24	DM20	80m6	210	170	200	28

Frame	FA	G	GB	GD	GF	H	HA	HB	HC	HD	HF	HH	HK	K	L	LC	LL	LM	S1	DE	NDE
63	3	8.5	7.2	4	3	63	7	25.5	130	156.3	68.5	80	59	7	216	241	108.5	99	2xM20x1,5	6201 ZZ	6201 ZZ
71	4	11	8.5	5	4	71	7	33	145	163.8	76	90	59	7	250	276	108.5	99	2xM20x1,5	6202 ZZ	6202 ZZ
80	5	15.5	11	6	5	80	8	43.5	163	174.3	87	100	59	10	277	313	108.5	99	2xM20x1,5	6204 ZZ	6203 ZZ
90S	5	20	13	7	5	90	9	45	182	182.4	90	106	67	10	305	350	115	104	2xM25x1,5	6205 ZZ	6204 ZZ
90L	5	20	13	7	5	90	9	45	182	182.4	90	118.5	67	10	329	375	115	104	2xM25x1,5	6205 ZZ	6204 ZZ
L90S	5	20	13	7	5	90	9	45	182	182.4	90	106	67	10			115	104	2xM25x1,5	6205 ZZ	6204 ZZ
L90L	5	20	13	7	5	90	9	45	182	182.4	90	118.5	67	10			115	104	2xM25x1,5	6205 ZZ	6204 ZZ
100L	6	24	18.5	7	6	100	10	61.5	205	244	106.4	133	67	12	376	431	115	104		6206 ZZ	6205 ZZ
L100L	6	24	18.5	7	6	100	10	61.5	205	244	106.4	133	67	12			115	104		6206 ZZ	6205 ZZ
112M	8	24	20	7	7	112	10	54.5	226	280	112	140	80	12	394	448	140	133	2xM32x1,5	6207 ZZ	6206 ZZ
L112M	8	24	20	7	7	112	10	54.5	226	280	112	140	80	12			140	133	2xM32x1,5	6207 ZZ	6206 ZZ
132S	8	33	24	8	7	132	16	75	274	319	132	159	80	12	452	519	140	133	2xM32x1,5	6308 ZZ	6207 ZZ
132M	8	33	24	8	7	132	16	75	274	319	132	178	80	12	489	557	140	133	2xM32x1,5	6308 ZZ	6207 ZZ
132M/L	8	33	24	8	7	132	16	75	274	319	132	190.5	80	12	515	582	140	133	2xM32x1,5	6308 ZZ	6207 ZZ
160M	12	37	37	8	8	160	22	79	331	374	168	213	101	14.5	598	712	198.5	190	2xM40x1,5	6309 C3	6209 C3
160L	12	37	37	8	8	160	22	79	331	374	168	235	101	14.5	642	756	198.5	190	2xM40x1,5	6309 C3	6209 C3
180M	14	42.5	42.5	9	9	180	28	92	366	413	180	241.5	101	14.5	664	782	198.5	190	2xM40x1,5	6311 C3	6211 C3
180L	14	42.5	42.5	9	9	180	28	92	366	413	180	260.5	101	14.5	702	820	198.5	190	2xM40x1,5	6311 C3	6211 C3
200L	14	49	42.5	10	9	200	30	119	407	464	218	285.5	119.5	18.5	767	880	230	220	2xM50x1,5	6312 C3	6212 C3
225S/M	18	53	53	11	11	225	34	254	453	541	421	212	153	18.5	886	1034	269	285	2xM50x1,5	6314 C3	6314 C3
250S/M	18	58	53	11	11	250	43	297	493	583	463	214	153	24	965	1113	269	285	2xM63x1,5	6314 C3	6314 C3
280S/M	18	67.5	58	12	11	280	42	386	580	700	572	266	151	24	1071	1223	314	312	2xM63x1,5	6316 C3	6316 C3
315S/M	18	71	58	14	11	315	48	386	644	768	592	264	176	28	1274	1426	379	382	2xM63x1,5	6319 C3	6316 C3
315L	18	71	58	14	11	315	48	336	644	774	575	284	220	28	1389	1536	404	436	2xM63x1,5	6319 C3	6316 C3
355M/L	22	90	71	16	14	355	50	461	723	898	700	339	220	28	1482	1677	404	436	2xM63x1,5	6322 C3	6319 C3

Dimensions measured in millimeters.

Drawings on next page

Data subject to change without notice.

IEC Metric Motors - Cast Iron Frames - *continued*

Frames 63 to 132M/L

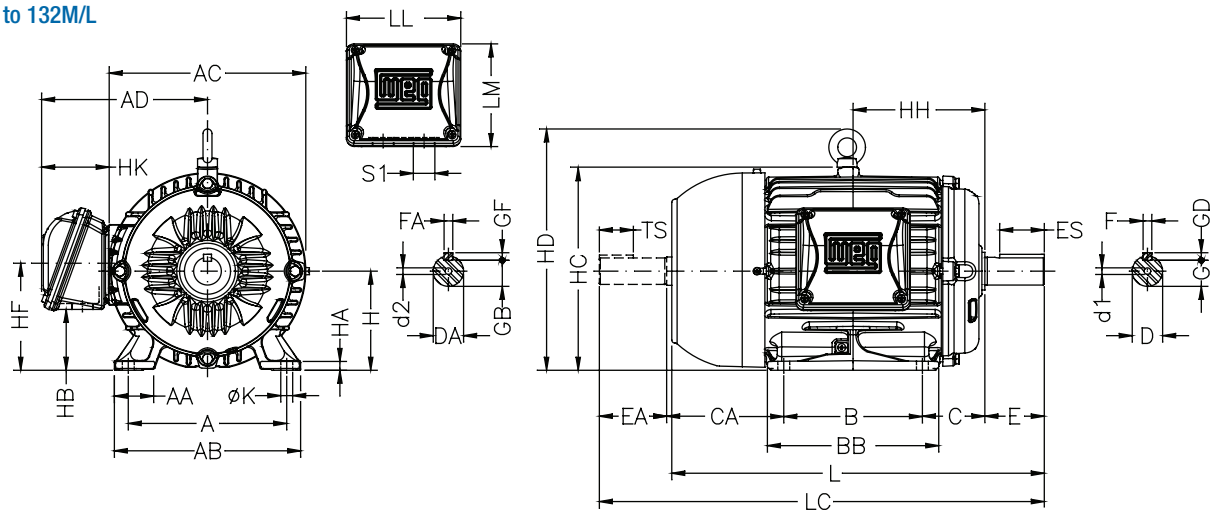

Frames 160L to 200L

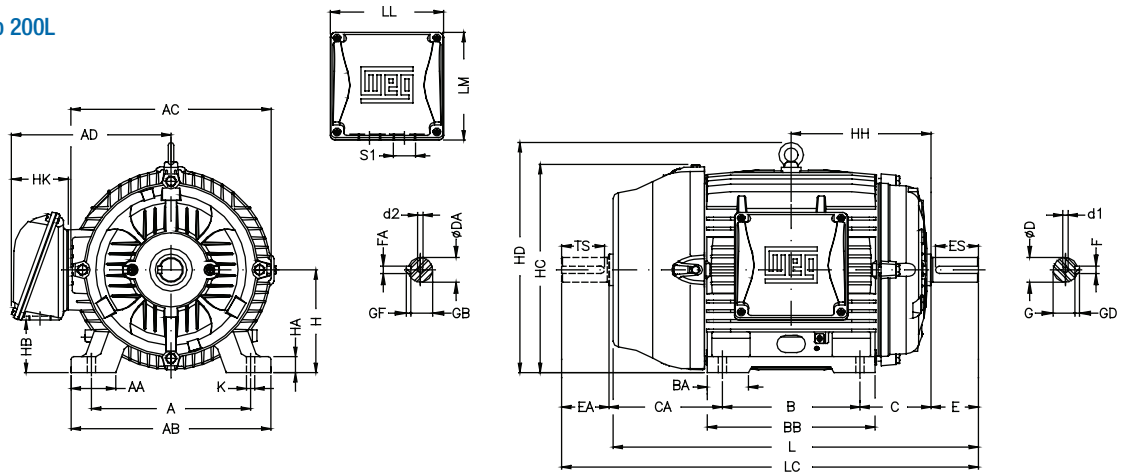

Frames 225S/M to 355M/L

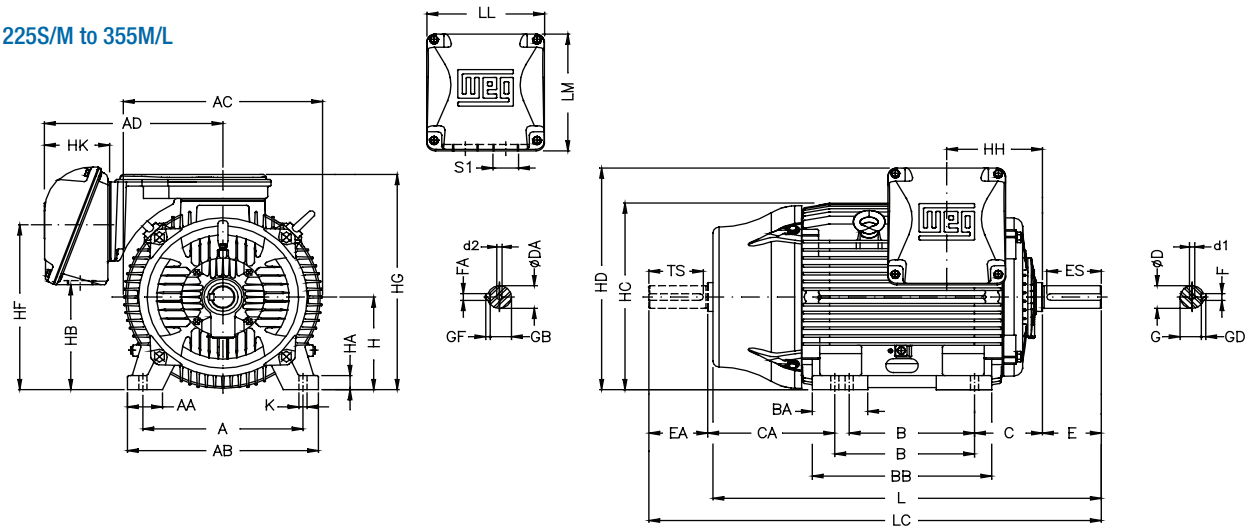

IEC Metric Motors - Cast Iron Frames - Additional Flange Detail

Frame	Type	Flange	Size	LA	M	N	P	S	T	Angle	Holes
63	C	FC	FC-95	4.5	95.2	76.2	143	UNC 1/4”x20	4	45°	4
63	C	C-90	C-90	9.5	75	60	90	M5	2.5	45°	4
71	C	FC	FC-95	10	95.2	76.2	143	UNC 1/4”x20	4	45°	4
71	C	C-105	C-105	8	85	70	105	M6	2.5	45°	4
80	C	FC	FC-95	10	95.2	76.2	143	UNC 1/4”x20	4	45°	4
80	C	C-120	C-120	10.5	100	80	120	M6	3	45°	4
90S	C	FC	FC-149	15	149.2	114.3	165	UNC 3/8”x16	4	45°	4
90S	C	C-140	C-140	10.5	115	95	140	M8	3	45°	4
90L	C	FC	FC-149	15	149.2	114.3	165	UNC 3/8”x16	4	45°	4
90L	C	C-140	C-140	10.5	115	95	140	M8	3	45°	4
100L	C	FC	FC-149	12	149.2	114.3	165	UNC 3/8”x16	4	45°	4
100L	C	C-160	C-160	12	130	110	160	M8	3.5	45°	4
112M	C	FC	FC-184	13.5	184.2	215.9	225	UNC 1/2”x13	6.3	45°	4
112M	C	C-160	C-160	13.5	130	110	160	M8	3.5	45°	4
L90S	C	FC	FC-149	15	149.2	114.3	165	UNC 3/8”x16	4	45°	4
L90S	C	C-140	C-140	10.5	115	95	140	M8	3	45°	4
L100L	C	FC	FC-149	12	149.2	114.3	165	UNC 3/8”x16	4	45°	4
L100L	C	C-160	C-160	12	130	110	160	M8	3.5	45°	4
L90L	C	FC	FC-149	15	149.2	114.3	165	UNC 3/8”x16	4	45°	4
L90L	C	C-140	C-140	10.5	115	95	140	M8	3	45°	4
132S	C	FC	FC-184	9	184.2	215.9	225	UNC 1/2”x13	6.3	45°	4
132S	C	C-200	C-200	15.5	165	130	200	M10	3.5	45°	4
132M	C	FC	FC-184	9	184.2	215.9	225	UNC 1/2”x13	6.3	45°	4
132M	C	C-200	C-200	15.5	165	130	200	M10	3.5	45°	4
L112M	C	FC	FC-184	13.5	184.2	215.9	225	UNC 1/2”x13	6.3	45°	4
L112M	C	C-160	C-160	13.5	130	110	160	M8	3.5	45°	4
160M	C	FC	FC-184		184.2	215.9	225	UNC 1/2”x13	6.3	45°	4
160M	C	C-250	C-250	19	215	180	249	M12x1,75	6.3	45°	4
132M/L	C	FC	FC-184	9	184.2	215.9	225	UNC 1/2”x13	6.3	45°	4
132M/L	C	C-200	C-200	15.5	165	130	200	M10	3.5	45°	4
160L	C	FC	FC-184		184.2	215.9	225	UNC 1/2”x13	6.3	45°	4
160L	C	C-250	C-250	19	215	180	249	M12x1,75	6.3	45°	4
180M	C	FC	FC-228	13.5	228.6	266.7	280	UNC 1/2”x13	6.3	45°	4
180L	C	FC	FC-228	13.5	228.6	266.7	280	UNC 1/2”x13	6.3	45°	4
200L	C	FC	FC-228	13.5	228.6	266.7	280	UNC 1/2”x13	6.3	45°	4
225S/M	C	FC	FC-279	18.5	279.4	317.5	395	UNC 5/8”x11	6.3	22°30’	8
250S/M	C	FC	FC-355	18.5	355.6	406.4	455	UNC 5/8”x11	6.3	22°30’	8
280S/M	C	FC	FC-355	18.5	355.6	406.4	455	UNC 5/8”x11	6.3	22°30’	8
315S/M	C	FC	FC-368	18.5	368.3	419.1	455	UNC 5/8”x11	6.3	22°30’	8
315L	C	FC	FC-368	18.5	368.3	419.1	455	UNC 5/8”x11	6.3	22°30’	8
355M/L	C	FC	FC-368	33.5	368.3	419.1	455	UNC 5/8”x11	6.3	22°30’	8

Dimensions in mm

FC & C-DIN Flanges

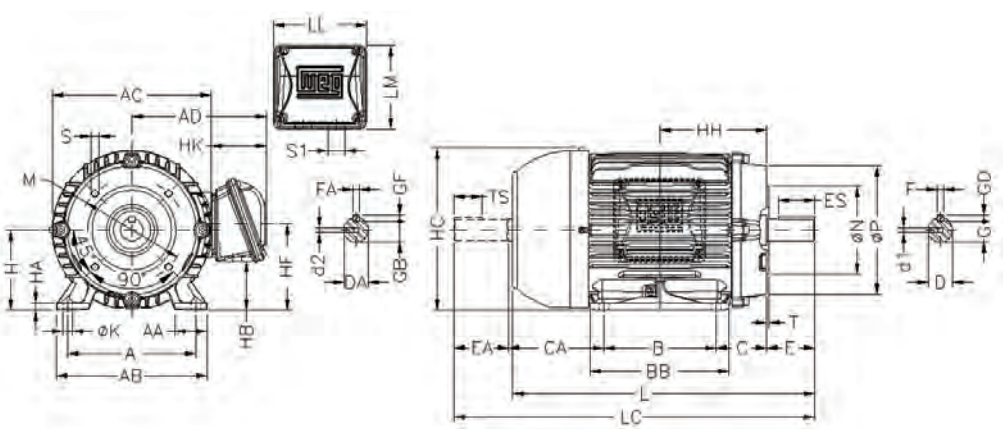

Data subject to change without notice.

IEC Metric Motors - Cast Iron Frames - Additional Flange Detail

Frame	Type	Flange	Size	LA	M	N	P	S	T	Angle	Holes
63	F	FF	FF-115	5.5	115	95	140	10	3	45°	4
71	F	FF	FF-130	7	130	110	160	10	3.5	45°	4
80	F	FF	FF-165	9	165	130	200	12	3.5	45°	4
90S	F	FF	FF-165	10	165	130	200	12	3.5	45°	4
90L	F	FF	FF-165	10	165	130	200	12	3.5	45°	4
100L	F	FF	FF-215	12.5	215	180	250	15	4	45°	4
112M	F	FF	FF-215	12.5	215	180	250	15	4	45°	4
L90S	F	FF	FF-165	10	165	130	200	12	3.5	45°	4
L100L	F	FF	FF-215	12.5	215	180	250	15	4	45°	4
L90L	F	FF	FF-165	10	165	130	200	12	3.5	45°	4
132S	F	FF	FF-265	12	265	230	300	15	4	45°	4
132M	F	FF	FF-265	12	265	230	300	15	4	45°	4
L112M	F	FF	FF-215	12.5	215	180	250	15	4	45°	4
160M	F	FF	FF-300	18	300	250	350	19	5	45°	4
132M/L	F	FF	FF-265	12	265	230	300	15	4	45°	4
160L	F	FF	FF-300	18	300	250	350	19	5	45°	4
180M	F	FF	FF-300	18	300	250	350	19	5	45°	4
180L	F	FF	FF-300	18	300	250	350	19	5	45°	4
200L	F	FF	FF-350	18	350	300	400	19	5	45°	4
225S/M	F	FF	FF-400	18	400	350	450	19	5	22°30'	8
250S/M	F	FF	FF-500	18	500	450	550	19	5	22°30'	8
280S/M	F	FF	FF-500	18	500	450	550	19	5	22°30'	8
315S/M	F	FF	FF-600	22	600	550	660	24	6	22°30"	8
315L	F	FF	FF-600	22	600	550	660	24	6	22°30`	8
355M/L	F	FF	FF-740	22	740	680	800	24	6	22°30'	8

Dimensions in mm

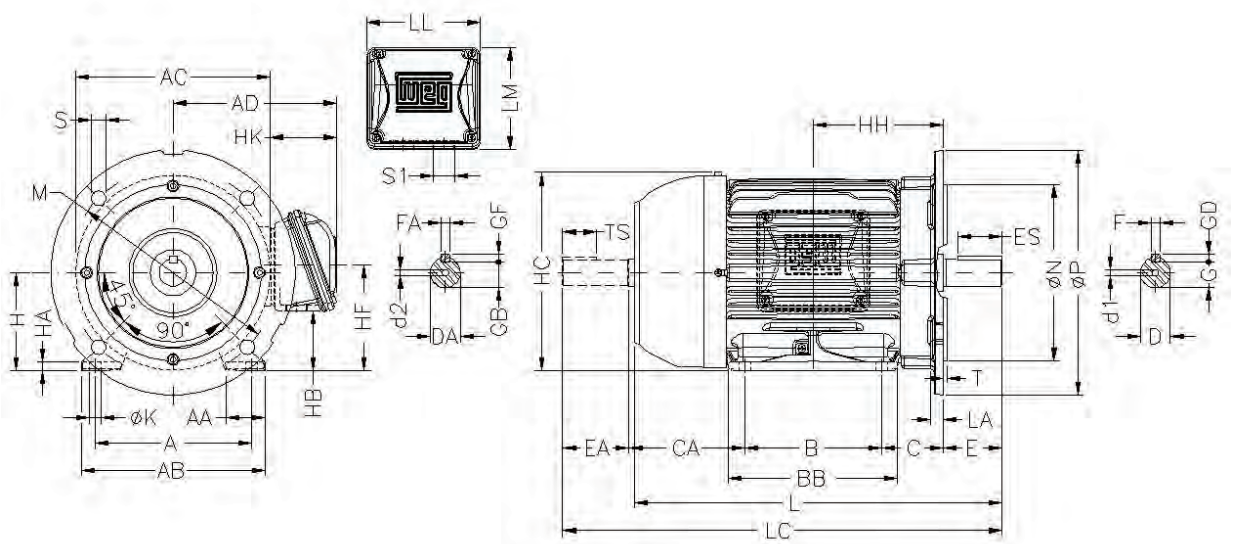

Data subject to change without notice.