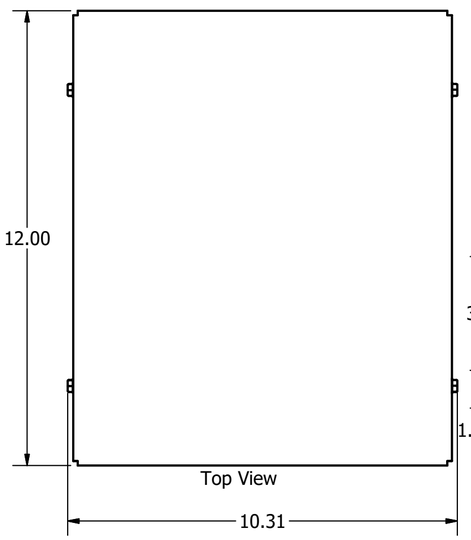

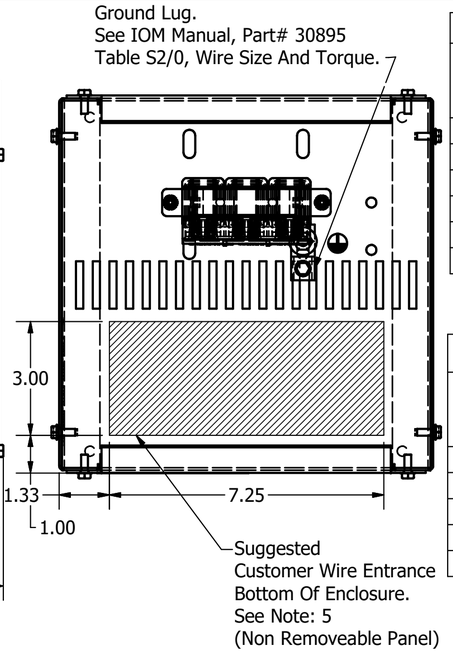

480 Rated Voltage, 690 Max Voltage, High Z, Impedance.						
Part Number	Horsepower (HP)	Motor Amps (A)	Maximum Amps (A)	Inductance (uH) +/-10%	Weight (LBS)	Losses (W)
KDRMA1H1E3R1	1/4	0.70	1.4	52500	16.3	7.9
KDRMA2H1E3R1	1/3	0.80	1.4	45900	16.5	9.2
KDRMA3H1E3R1	1/2	1.10	1.6	33400	16.3	14.3
KDRMA4H1E3R1	3/4	1.60	2.1	23000	16.4	19.3
KDRMA5H1E3R1	1	2.10	2.3	17500	16.4	26.7
KDRMA6H1E3R1	1 1/2	3.0	3.6	12300	16.6	30.0

480 Rated Voltage, 690 Max Voltage, Low Z, Impedance.						
Part Number	Horsepower (HP)	Motor Amps (A)	Maximum Amps (A)	Inductance (uH) +/-10%	Weight (LBS)	Losses (W)
KDRMA1L1E3R1	1/4	0.70	1.4	31500	16.3	5.0
KDRMA2L1E3R1	1/3	0.80	1.7	27600	16.3	6.2
KDRMA3L1E3R1	1/2	1.10	1.6	20000	16.3	9.7
KDRMA4L1E3R1	3/4	1.60	2.3	13800	16.3	12.1
KDRMA5L1E3R1	1	2.10	2.3	10500	16.2	25.2
KDRMA6L1E3R1	1 1/2	3.00	3.4	7400	16.4	26.4
KDRMA7L1E3R1	2	3.40	4.2	6500	16.4	23.5
KDRMA8L1E3R1	3	4.80	5.0	4600	16.4	30.6

600 Rated Voltage, 690 Max Voltage, High Z, Impedance.						
Part Number	Horsepower (HP)	Motor Amps (A)	Maximum Amps (A)	Inductance (uH) +/-10%	Weight (LBS)	Losses (W)
KDRMA41H1E3R1	1/4	0.50	0.80	91900	16.3	5.9
KDRMA42H1E3R1	1/3	0.70	0.75	65600	16.2	9.1
KDRMA43H1E3R1	1/2	0.90	1.1	51000	16.5	12.9
KDRMA44H1E3R1	3/4	1.30	1.6	35300	16.6	14.6
KDRMA45H1E3R1	1	1.70	2.1	27000	16.5	27.0

600 Rated Voltage, 690 Max Voltage, Low Z, Impedance.						
Part Number	Horsepower (HP)	Motor Amps (A)	Maximum Amps (A)	Inductance (uH) +/-10%	Weight (LBS)	Losses (W)
KDRMA41L1E3R1	1/4	0.50	0.80	55100	16.2	3.9
KDRMA42L1E3R1	1/3	0.70	1.1	39400	16.2	6.1
KDRMA43L1E3R1	1/2	0.90	1.6	30600	16.1	8.5
KDRMA44L1E3R1	3/4	1.30	2.1	21200	16.3	10.9
KDRMA45L1E3R1	1	1.70	2.1	16200	16.3	16.2
KDRMA46L1E3R1	1 1/2	2.40	3.4	11500	16.4	17.2
KDRMA47L1E3R1	2	2.70	3.2	10200	16.5	20.5

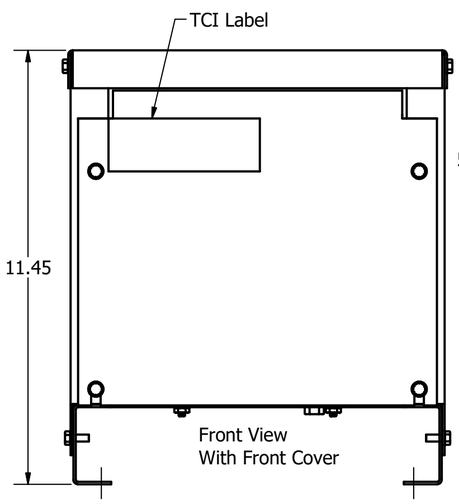

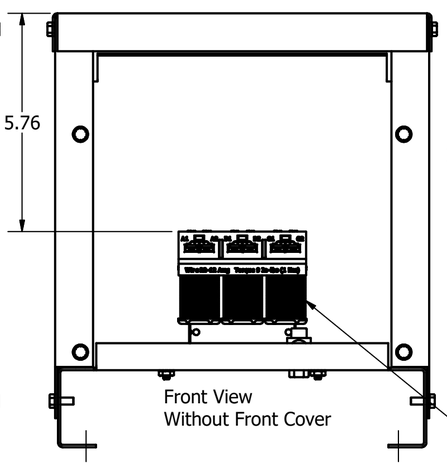

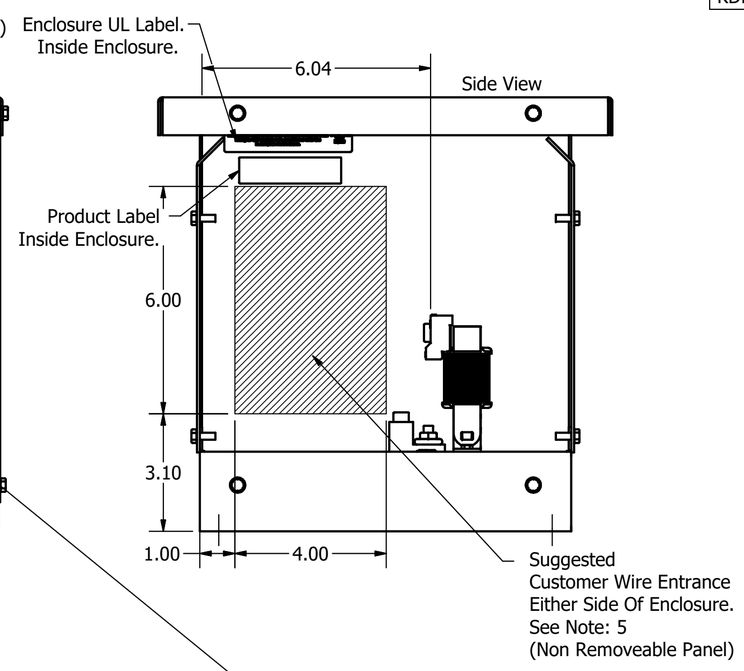

TCI, LLC ‖ Germantown, WI ‖ transcoil.com

KDR Drive Reactor

KDR——— Motor Amps—

3PH 50/60Hz, —V Rated, 690V Max, —A Max, RoHS

50C Amb Max 135C Rise, Manual # 30895

Date Code

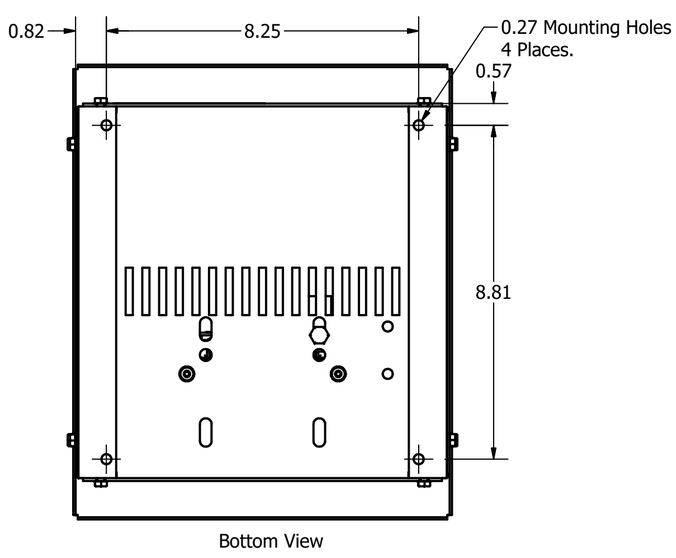

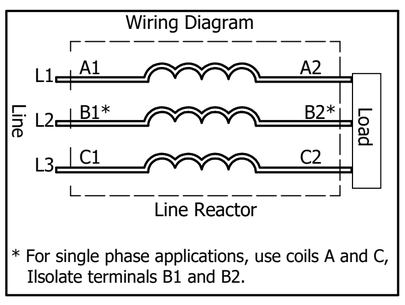

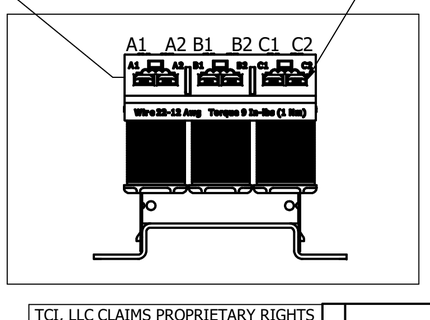

Notes:
1. UL file number: cULus Listed File E116124.
2. KDR Drive Reactors Comply With The Thermal and Altitude Standards Set Forth by NEMA ST20-1992.
3. KDR IOM Manual Part Number 30895
4. Material(s) Shall be RoHS Compliant
5. User To Punch Own Holes For Wire Entry.
6. Customer Is Responsible For Installation To Meet All National And Local Electrical Codes.

TCI, LLC CLAIMS PROPRIETARY RIGHTS IN THE MATERIAL HEREIN DISCLOSED. IT IS SUPPLIED WITHOUT PREDJUDICE TO ANY PATENT RIGHTS OF TCI AND MAY NOT BE REPRODUCED OR USED TO MANUFACTURE ANYTHING SHOWN THEREIN WITHOUT WRITTEN PERMISSION FROM TCI.

NO	REVISION	DATE	BY
A	As Designed	10/20/17	DSW

TOLERANCES (EXCEPT AS NOTED)
DECIMAL .XX ± .25 .XXX ± .10
FRACTIONAL ± 1/16
ANGULAR ± 1°

TCI W132 N10611 Grant Drive Germantown, WI 53022

KDR MA Frame, Terminal Block, Enclosed, Type 3R
Reactor Drawing

DRN. BY: DSW | DATE: 10/20/17 | 107123DG
SCALE: 1/3 | APRVD: | SIZE C | SHT.1 OF 1