PATLITE®

New Frontiers in Safety, Security and Comfort.

Complete

GENERAL CATALOG

www.patlite.com

PATLITE is Number 1 for Signaling Technology.

Combining innovative LED technology and advanced optical design, PATLITE's signaling products deliver the highest level of illumination and reliability with protection up to IP-69K. Featuring a broad selection of models, sizes, designs and optional accessories, you can find the best solution for specific requirements. PATLITE's quality standard guarantees long-term customer satisfaction in diversified applications. There is no better choice for signaling products than PATLITE for now and the future.
PATLITE is number one in the world for signaling solutions.

Outstanding Illumination

PATLITE's high-intensity LEDs and innovative lens design ensures outstanding illumination and exceptional brightness from any direction and distance.

Patented Reflection System

PATLITE's patented reflection system is optimized for full illumination over the entire lens.

Low Power Consumption

PATLITE's high-intensity LEDs are eight times more efficient than conventional incandescent bulbs.

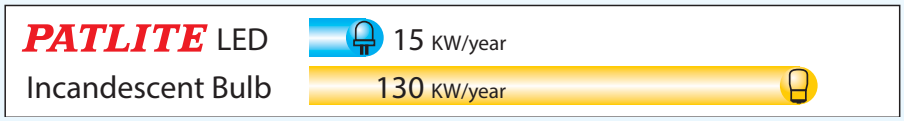

Long Service Life and Reliability

PATLITE's high-intensity LEDs guarantees an extended service life of 60,000 hours. That is more than 5 years of continuous operation!

Note: For one LED module and one bulb with continuous operation

Reduced Maintenance and Labor

PATLITE's high-intensity LEDs drastically reduces costly maintenance requirements for replacing bulbs. The life of PATLITE's high intensity LEDs is over 16 times longer than conventional incandescent bulbs.

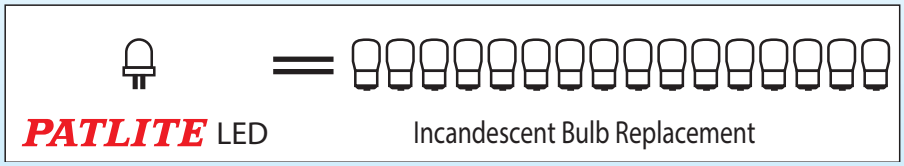

Note: Both with continuous operation

Environmentally Responsible

Many PATLITE products use lead-free technology, and are RoHS compliant. In addition, long-life LEDs reduce waste compared to conventional incandescent bulbs.

PATLITE ECO PROJECT

Rugged and Robust Design

PATLITE's design with a center shaft in its signal tower ensures the structural integrity of the modules, promising protection against vibration and mishandling. Yet, it offers modularity and flexibility for changing the LED modules. The smooth-finished body surface prevents collection and adhesion of dust, making our products easy to clean. PATLITE's signaling products are constructed using world-class quality materials to withstand harsh production environments.

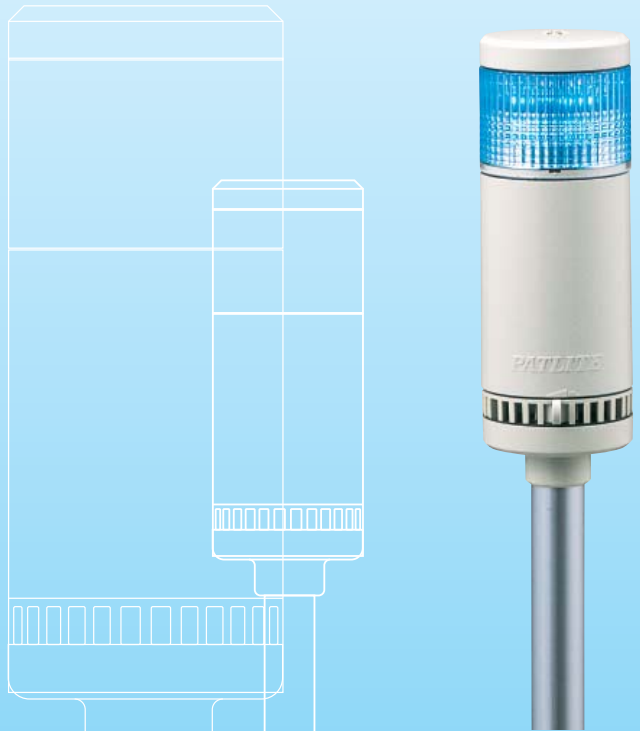

“New Frontiers in Safety, Security and Comfort” is PATLITE`s mission.

PATLITE offers state-of-the-art equipment for process and industrial automation for over 60 years. Our Innovative and robust design, backed by a powerful commitment and years of knowledge, has made PATLITE the world’s best known manufacturer of the visual and audible signaling products.
We are also dedicated to the development of explosive and harsh-environment products to demonstrate our strong commitment to serving the industry with unique and innovative solutions.

In order to identify the diversified needs of our customers, and respond quickly and satisfactorily to those needs, we have implemented the POP (Point of Production) System together with a lean-manufacturing cell-based assembly system (combination, single, and flexible assembly).
These new systems allow us to handle any order rapidly from single items to customized item orders.

We’ve also reduced development time and production cost by having our own in-house machinery to produce, design and manufacture metal moldings and plastic materials with the use of injection machinery.

From designing to production, from raw material to the finished product, we also manage our quality control throughout the entire process. This is how we maintain our world class quality reputation in the visual, audible signaling and networking information products.

■ From designing to production, quality control is managed throughout the process

- 3D CAD Design

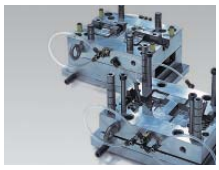

- Metal Part Molding Manufacturing

- Electrical discharge machine

- Machining Center

- Injection molding machines

■ Wide-range of Innovative and World-class Quality Products

World-wide Sales, Marketing and After-sales Support Network

INTRODUCTION TO VISUAL & AUDIBLE SIGNAL APPLICATIONS

Since 1947, PATLITE has been at the forefront in developing and innovating a variety of signaling products. PATLITE's extensive product range covers highly advanced LED signal towers, beacons, audible alarms, annunciators, and work lights for industrial automation and security applications. As a top brand manufacturer, we aspire to become the global standard for signaling products.

PATLITE products are used in various industries to improve productivity, quality, safety, and security. See how PATLITE can improve your process by reviewing the examples in the following pages.

PACKAGING / PROCESSING MACHINES

Use PATLITE signaling devices to provide emergency management for automated carriers, belt conveyors, and other types of equipment on which cargo and/or devices are transported on.

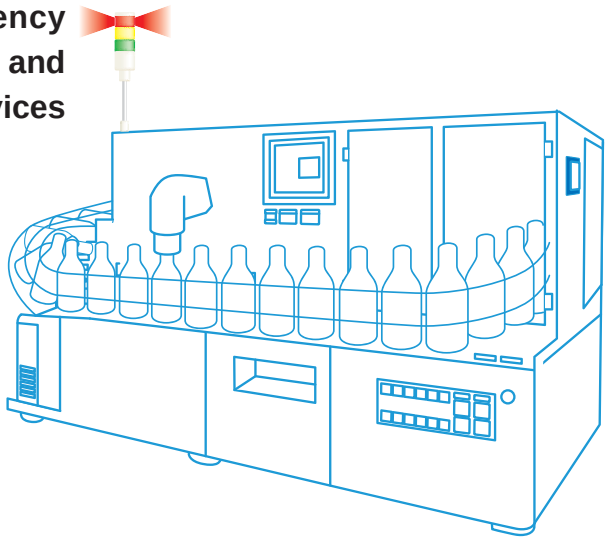

- **Recordable Smart Alert**
- **Smart Alert**
- **Signal Tower**
- **Signal Horn**

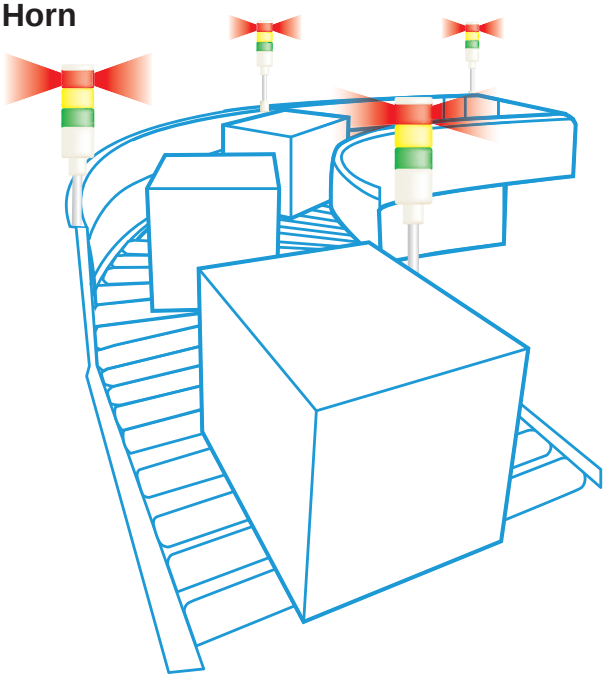

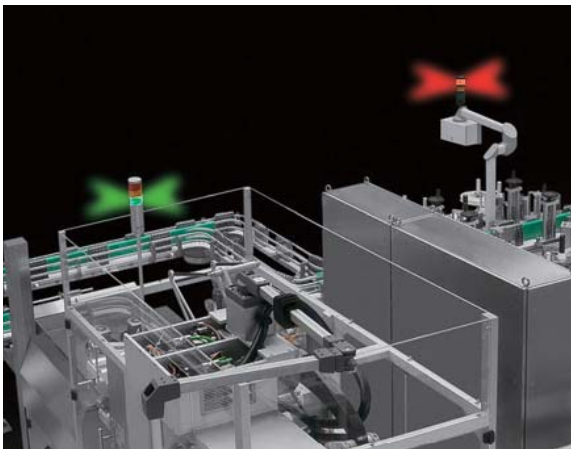

SEMICONDUCTOR / LIQUID CRYSTAL

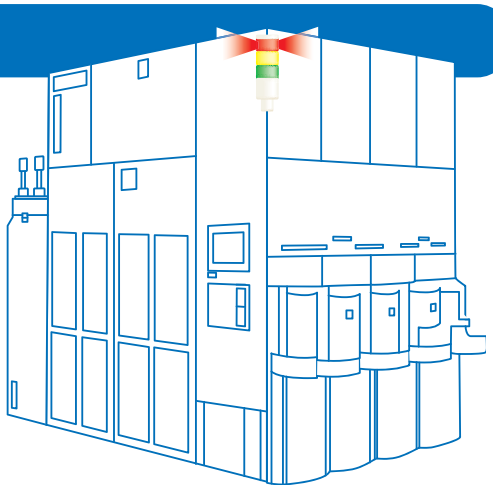

Achieve high levels of performance and profitability with semiconductor manufacturing equipment.
Real-time machinery status monitoring.

- **Signal Tower**
- **Signal Horn**
- **Recordable Smart Alert**
- **Smart Alert**

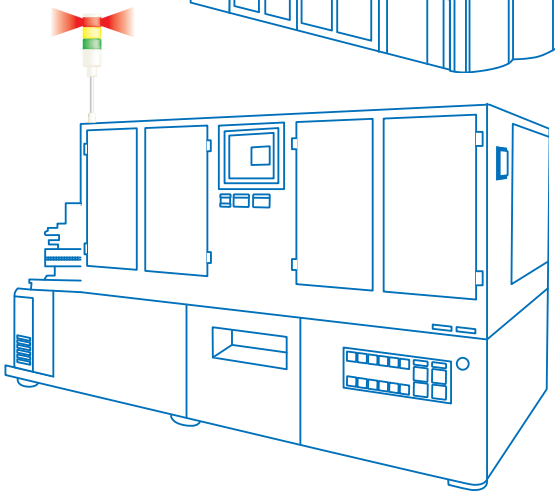

PRINTING

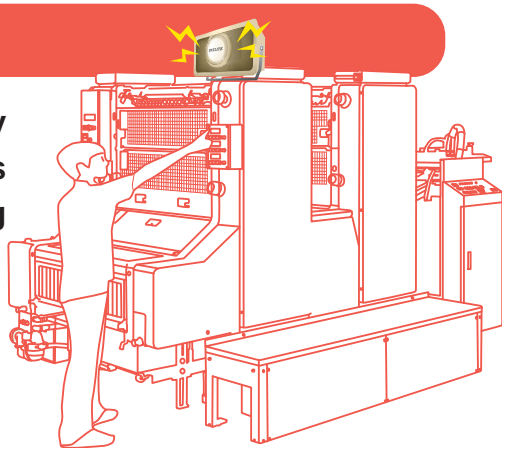

Ensure safe operation by allowing operators to accurately ascertain the operating conditions of printing machines and sounding an alarm in the event of manufacturing losses or machine failure.
Enable operators of printing machines running at a high speed to quickly recognize manufacturing losses and equipment malfunctions by providing them with guidance on resolving paper-feed failures, replenishing ink at suitable times, and other such matters.

- **Signal Tower**
- **Signal Horn**
- **Recordable Smart Alert**
- **Smart Alert**

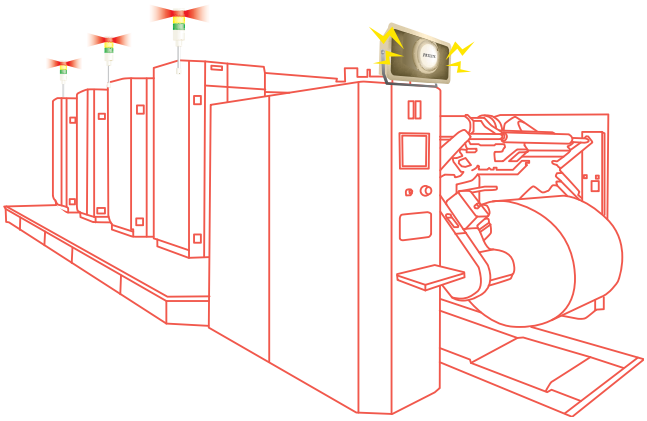

INFORMATION COMMUNICATION

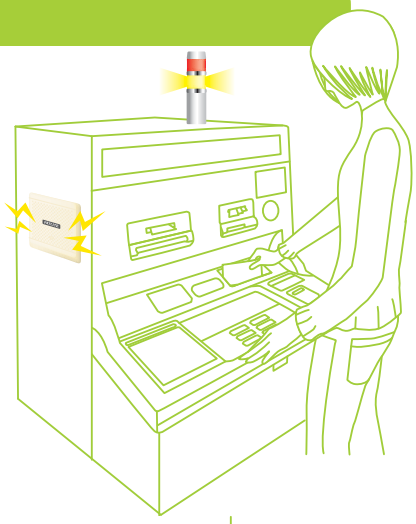

Enable appropriate actions to be taken at call centers, control rooms, and other information control centers.

Indicate the existence of incoming calls, system errors, etc, at call centers and other facilities. Also enable from remote locations to quickly recognize malfunctions and resolve them by displaying such information on the display panels for systems installed in control rooms at transport facilities and other sites.

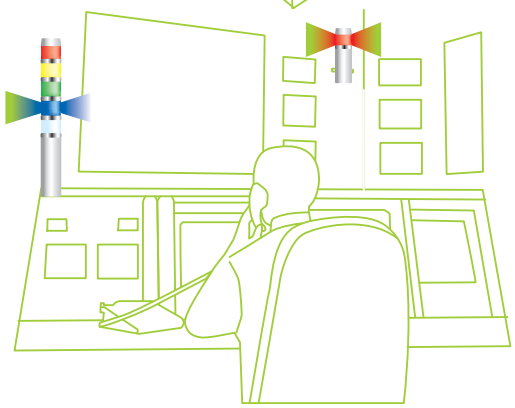

- **Signal Tower**
- **Signal Horn**
- **Recordable Smart Alert**
- **Smart Alert**
- **Network Monitoring System**

CONSTRUCTION MACHINES

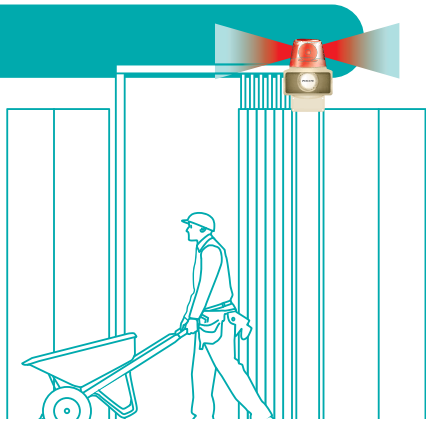

Prevent accidents involving construction machinery and other accidents occurring at dangerous locations such as construction sites.

Help to mitigate the effects of blind spots on large construction vehicles and machines with the use of LED beacons and other alarm devices. Our broad lineup of products, such as loud Smart Alerts, ensures that workers are aware of alarms even at noisy construction sites.

- **Signal Tower**
- **Signal Horn**
- **Recordable Smart Alert**
- **Smart Alert**

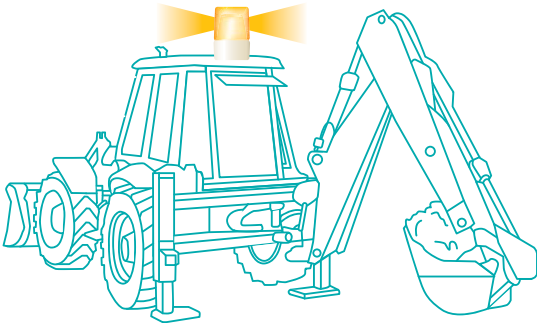

Index of Ingress Protection defined by CEI / IEC 529

IP □□

Code No		
No protection.	0	No protection.
Protection against solid objects larger than ø50mm.	1	Protection against vertical falling drops of water.
Protection against solid objects larger than ø12mm.	2	Protection against dripping water when tilted up to 15°
Protection against solid objects larger than ø2.5mm.	3	Protection against spraying water.
Protection against solid objects larger than ø1mm.	4	Protection against splashing water.
Protection against dust-limited ingress (dust-protected).	5	Protection against water jets.
Total protection against dust (dust-tight).	6	Protection against heavy seas.
	7	Protection against the effects of immersion.
	8	Protection against submersion.

IP6X	IPX6	IPX7	IPX9X
Typical Environment	**Dusty Environment**	**Watersplash Environment**	**Water Exposed Environment**	**High Pressure Washing Environment**
• Control/Switchboard Panel Lighting • Machinery and Equipment Lighting	• Machining/Factory Sites • Farmsteads • Signboards/Working Lights • Commercial/Public Furnishings	• Meat and Food Packaging/ Processing Industry • Beverage Industry • Pharmaceutical Industry

Protection Rating Testing Requirements

- IP6X= The product is placed in a dust chamber with a negative pressure state so that dust is made to float, and there is no invasion inside.
- IPX6= A water nozzle with a diameter of 12.0mm is placed at a range from 2.5 to 3.0 meters with a water velocity of 100 litres per minute injected towards the test piece in an omni direction for three minutes or more without being affected by any harmful influences.
- IPX7= With the distance of 0.15 m from the top of the product to the water surface and a distance from the bottom of the product to the bottom of the tank at a distance of 1 m, it is submerged for 30 minutes with no harmful penetration.

* Since testing is performed under a controlled environment within provisions including a designated time, it does not consider conditions for continuous use.

IP69K

IP69K is the German DIN 40050 PART9 standard. It is defined as a protection regulation for high temperature and high-pressurized water. Water is heated up to 80°C and sprayed at a water pressure in the range from 80 to 100 bars at 14 to 16 liters per minute at the test object. The test object is at a distance of 100 to150 mm from the nozzle and sprayed in all directions at 0, 30, 60, and 90 degrees, then sprayed at a horizontal angle while it is being rotated, all done for a period of 30 seconds without being affected by water penetration.

Our plan is to increase “Safety, Security, and Comfort” to serve the world.

CEO and President
Setsujiro Yamamoto

We earnestly seek to provide valuable goods and services from the customer’s viewpoint. We work to create a company that thrives on adversity, building a company for the enrichment of society.

We, the PATLITE group, have obtained customer support and established a dominant position in the Japanese market as a leading manufacturer of information display equipment by providing value added products and services guided by our corporate philosophy of “Safety, Security, and Comfort”.
The PATLITE group wants to achieve various social contributions and promote environmentally friendly products through our daily corporate activities, while constantly refining our corporate philosophy to reflect the demands of the current times. Our intention is to grow as an enterprise into a global business that can be relied upon by society and trusted by customers of the world, as we are in Japan, as a leading company in the industry by capitalizing on the strengths of our activities in our country. You can count on our growth. We ask for your continuous support and encouragement.

Localized Product Development

While PATLITE implements local marketing strategies for the area, We are also building a sales network to meet the characteristics for each country and area. The customer's request is precisely understood and the product development details are considered for global standards as well as for local specifications. Furthermore, the various safety standards and environmental regulations of the world are taken into account.

Global Support System Established

Unique value-added solutions are developed by being sensitive to and catching the customer's needs through our sales network and distribution channels established in primary markets for each country of the world. We established an organization for quick response and flexible support from the customer's viewpoint, in order to accelerate globalization. We promise to propose solutions and to become a reliable partner as a professional in the manufacturing industry.

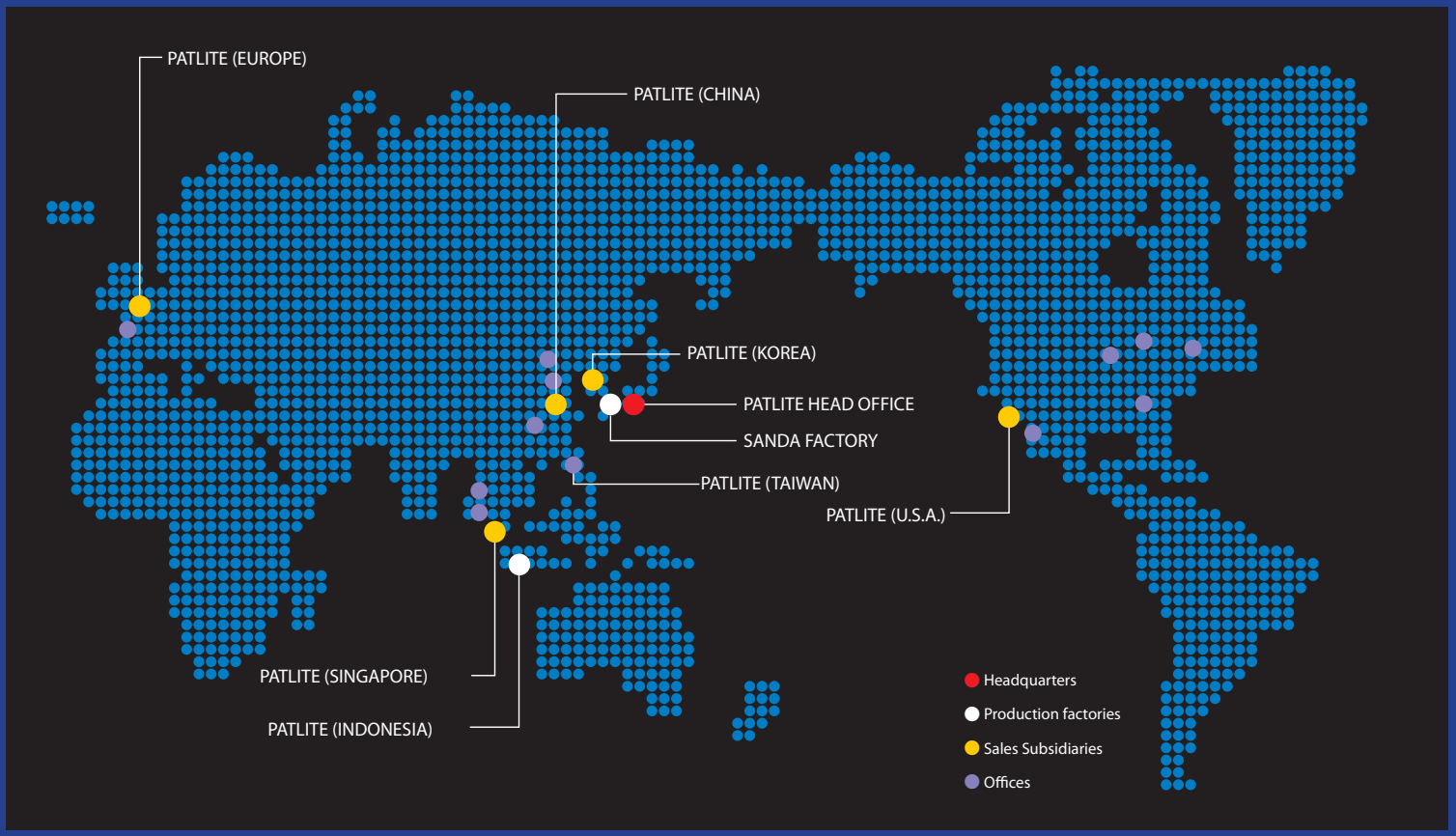

Product Category Index

New Products

CLN	18
EHS	20
EHV	20
PSE	23
LFH	24
LFK	25
XPE	26
XME	27
LP3	28
LP5	29

Network Products

WD	32
NHL	34
LE-K3	36
WEP-K3	36
LHE-C3	38
LE-C3	38
WEP-C3	38
PHE-3FBE1	40
PHC-100A	41
PHU-3	42
VE25	44
VE100	44

Explosion-Safe Products

EDLM	48
EDWM	48
AR-070	50
AR-078	51
LKEH-EX	52
EHS-EX	53
EHV-EX	53
CLN-EX	54
CLK-EX	55
CLA-EX	56
RES-A	57

Signal Tower

ME-A	60
MES-A	60
MP	62
MPS	62
MP-C	64
LCE	66
LCE-U	66
LCS	69
LCS-U	69
LES-A	71
LE	73
LU5	76
LMS	80
LME	82
LME-U	82
LME-N	82
LME-S	86
LME-Q	86
LHE-A	89
LU7	92
LU7-XE	98
LS7	100
WE	104
WEP	104
WME-A	107
LGE	110
WSST	114
HSST	115

Signal Lights

NE-24	118
KHE	119
PEW-A	120
PES-A	120
KPE-A	122

Revolving Warning Light

SKHE	126
SKHEB	126
RLE	127
RKE	128
RKEB	128
RHE	128
RHEB	128
RKEM	129
RHEM	129
RU	130
RUP	130
RS	130
RH-A	131
RK-A	131
SKH-A	132
SKH-EA	133
SKP-A	134
SKL-A	135
SKC-A	136
SKV-A	137
SKHB-1006D	138
KP-A	139
WH-A	140
WK-A	140
HP	141
KG	142
HKFM	143
RLR	144
KUS	146
KJS	148
KJSB	148
KJ	150
KJB	150

LED Light

CLA	154
CLK	156

Alarm Products

BM	160
BD	162
BK	164
EWHS	166

Voice & Sound

BSV	174
BDV	176
BKV	178
FV-127JP	180

Hybrid Products

LKEH	184
RFT	186
RFV	188
RT	190
KJT	192

Optional Parts

Optional Parts	196
DEB	197
MP-B	197
Melody Charts	203
Replacement Bulbs	204

Product Index

A

AR-070 50
AR-078 51

B

BD 162
BDV 176
BK 164
BKV 178
BM 160
BSV 174

C

CLA 154
CLA-EX 56
CLK 156
CLK-EX 55
CLN 18
CLN-EX 54

D

DEB 197

E

EDLM 48
EDWM 48
EHS 20
EHS-EX 53
EHV 20
EHV-EX 53
EWHS 166

F

FV-127JP 180

H

HKFM 143
HP 141
HSST 115

K

KG 142
KHE 119
KJ 150
KJB 150
KJS 148
KJSB 148
KJT 192
KP-A 139
KPE-A 122
KUS 146

L

LCE 66
LCE-U 66
LCS 69
LCS-U 69
LE 73
LE-C3 38
LE-K3 36
LES-A 71
LFH 24
LFK 25
LGE 110
LHE-A 89
LHE-C3 38
LKEH 184
LKEH-EX 52
LME 82
LME-N 82
LME-Q 86
LME-S 86
LME-U 82
LMS 80
LP3 28
LP5 29
LS7 100
LU5 76
LU7 92
LU7-XE 98

M

ME-A 60
Melody Charts 203
MES-A 60
MP 62
MP-B 197
MP-C 64
MPS 62

N

NE-24 118
NHL 34

O

Optional Parts 196

P

PES-A 120
PEW-A 120
PHC-100A 41
PHE-3FBE1 40
PHU-3 42
PSE 23

R

Replacement Bulbs 204
RES-A 57
RFT 186
RFV 188
RH-A 131
RHE 128
RHEB 128
RHEM 129
RK-A 131
RKE 128
RKEB 128
RKEM 129
RLE 127
RLR 144
RS 130
RT 190
RU 130
RUP 130

S

SKC-A 136
SKH-A 132
SKHB-1006D 138
SKHE 126
SKH-EA 133
SKHEB 126
SKL-A 135
SKP-A 134
SKV-A 137

V

VE25 44
VE100 44

W

WD 32
WE 104
WEP 104
WEP-C3 38
WEP-K3 36
WH-A 140
WK-A 140
WME-A 107
WSST 114

X

XME 27
XPE 26

Signal Tower

Diameter (mm)		25		30			40				50					
Model		ME-A	MES-A	MPS	MP	MP-C	LCE	LCE-U	LCS	LCS-U	LES-A	LE	LU5	LU5-U	LU5-K	
Page No.		62		64		66	68		71		73	75	78			
Voltage	AC/DC12V															
	DC24V	●	●										●	●	●	
	AC/DC24V			●	●	●	●	●	●	●	●	●				
	AC90-250V						◎	◎								
	AC100V											●				
	AC120V											●				
	AC220V											●				
	AC230V															
Body Color	White						●		●		●	●	●			
	Silver	●	●	●	●	●		●		●				●		
	Black														●	
Sound Function	dB						85					85	85			
	Sounds						2					2	2			
Connector Type	Terminal												●	●	●	
	M12 QD					●										
Transistor Input	PNP			●	●	●	●	●	●	●	●	●	●	●	●	
	NPN	●	●	●	●	●	●	●	●	●	●	●	●	●	●	
Flashing Function							●	●				●	●	●	●	
IP Rating		42		65			65		54		65	54	65			

Wall Mount Signal Tower

Model		WE/WEP	WME-A
Page No.		106	109
Voltage	AC/DC24V	●	●
	AC90-250V		◎
Body Color	White	●	●
	Chrome-plating	●	
Sound Function	dB	90	90
	Sounds	2	2
Transistor Input	PNP	●	●
	NPN	●	●
Flashing Function		●	●
IP Rating		65	65

Network

Model		LE-K3	WEP-K3	LE-C3	LHE-C3	WEP-C3
Page No.		38		40		
Voltage	DC 5V					
	DC 24V	●	●	●	●	●
	AC120V					
Network	CompoNet	●	●			
	CC-Link			●	●	●
	ZigBee					
Connection	LAN					
	USB					
	RS-232C					
	2.4GHz					
Body Color	White	●	●	●	●	●
	Silver					
	Black					
Mounting	Pole	●		●		
	Direct				●	
	Wall		●			●
Sound Function	dB	85	90	85	90	90
	Sounds	2	1	2	2	1
IP Rating		23	23	23	65	23

	60							70								100
	LMS	LME	LME-U	LME-N	LME-S	LME-Q	LHE-A	LU7-S	LU7-SU	LU7-SK	LU7	LU7-U	LU7-K	LS7-H	LS7-C	LGE
	82	84			88		91	94						102		112
					●	●		●	●	●	●	●	●	●	●	
	●	●	●	●			●									●
											◎	◎	◎			
		●	●		●	●	●									●
		●	●	●			●									●
		●	●		●	●	●									
		●	●	●												
	●	●			●	●	●	●			●			●	●	●
			●		●	●			●			●		●	●	
				●						●			●	●	●	
		90			90		90	90						90		85
		2			2		2	2						2		1
								●	●	●	●	●	●			
															●	
	●	●	●	●	▲	▲	●	●	●	●	●	●	●	●	●	●
	●	●	●	●	●	●	●	●	●	●	●	●	●	●	●	●
		●	●	●	●	●	●	●	●	●	●	●	●	●		●
	65	65			65		65	65						65		54

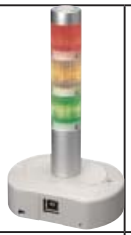

	NHL	PHE-3FBE1	PHC-100A	PHU-3	WDR-LE	WDT-5E	WDT-6M	VE25	VE100
	36	42	43	44	34			46	
				●					
	●		●		●	●	●	●	●
		●							
					●	●	●		
	●		●						
				●					
	●	●	●					●	●
					●	●	●		
	●	●	●		●	●	●		
				●					
								●	●
				●	●			●	●
					●				●
	80	85							
	4	2		1					
	20	-	-	20	-	-	-	-	-

Revolving Warning Light

Diameter (mm)		82			100										118	138	
Model		RLE	RU	RS	RKE	RKEM	RHE	RHEM	RH-A	RK-A	SKHE(B)	SKH-EA	WH-A	WK-A	SKH-A	SKP-A	
Page No.		129	132		130	131	130	131	133		128	135	142		134	136	
Voltage	DC12V	●	●	●	●	●	●	●	●	●	●	●	●	●	●	●	
	DC24V	●	●	●	●	●	●	●	●	●	●	●	●	●	●	●	
	AC24V		●	●											●		
	DC48V				●		●									●	
	AC100V	●	●	●	●		●		●	●	●	●	●	●	●	●	
	AC120V								●	●							
	AC200V				●		●		●	●	●	●	●	●	●	●	
	AC220V	●	●	●													
	AC240V		●	●					●	●							
	AC100-200V					●		●									
Body Color	White	●	●	●	●	●	●	●	●	●			●	●			
	Silver			●													
	Black																
	Dome Color										●	●			●	●	
Dome Color	Red	●	●	●	●	●	●	●	●	●	●	●	●	●	●	●	
	Yellow	●	●	●	●	●	●	●	●	●	●	●	●	●	●	●	
	Green	●	●	●	●	●	●	●	●	●	●	●	●	●	●	●	
	Blue	●	●	●	●	●	●	●	●	●	●	●	●	●	●	●	
	Violet														●		
Sound Function	dB				88	88	88	88	90	90	88		90	90	90		
	Sounds				1	1	1	1	1	1	1		1	1	1		
Light	Bulb		●	●					●	●		●	●	●	●	●	
	LED	●			●	●	●	●			●						
	Halogen																
IP Rating		23	23	23	23	23	23	23	23	23	23	23	54	54	23	23	
	w/Gasket	55	55	55	55	55	55	55	55								

Explosion-proof Signal Tower

Model		EDLM	EDWM	AR-070	AR-078	EHS/EHV	LKEH-FV	LKEH-FE	CLN	CLK	CLA	RES-A
Page No.		50		52	53	55	54		56	57	58	59
Voltage	DC12V											▲
	DC24V	●	●	●	●	●	●	●	●	●	●	▲
	AC24V	●	●	●	●							
	DC48V											●
	AC100V	●										●
	AC120V	●										▲
	AC90-250V		◎									
	AC220V											●
	AC230V											●
	AC240V											▲
Zone	1, 21	●	●									
	2, 22	●	●	●	●	●	●	●	●	●	●	
Conformity	CE	●	●	●	●	●	●	●	●	●	●	
	Ex	●	●	●	●	●	●	●	●	●	●	
IP Rating		66	66	65	65	65	54	54	66G/67G/69K	66G/67G/69K	66/67/69K	66

	162				182	186	187	204	
	KP-A	SKHB-1006D	SKL-A	RLR	HP	KG	SKC-A	SKV-A	HKFM
	141	140	137	146	143	144	138	139	145
			●	●	●	●	●	●	●
	●		●	●	●	●	●	●	●
			●	●					
	●		●			●	●	●	
	●								
	●		●				●	●	
				●					
	●	●						●	
			●						
				●	●	●			
			●				●		
	●		●	●	●	●	●	●	●
	●		●	●	●	●	●	●	●
	●		●	●			●		●
	●		●	●	●		●		●
		75							
		1							
	●	●	●			●	●	●	
				●					
					●				●
	23	23	23	66		23	23	66	

Cube Tower

		70 x 70	82 x 82	116 x 116
Size (mm)		70 x 70	82 x 82	116 x 116
Model		KUS	KJS(B)	KJ(B)
Page No.		148	150	152
Voltage	DC12V		●	
	DC24V	●	●	●
	AC24V	●		
	AC100V	●	●	●
	AC120V	●	●	●
	AC220V	●	●	●
Body Color	Ivory White	●	●	●
Alarm Function	dB	80	85	85
	Tones	1	1	1
Transistor Input	PNP		●	
	NPN			
IP Rating		54	23	23

Signal Light

		57	100			107	82		162		187
Diameter (mm)											
Model		NE-24	KHE	LFH	LFK	PEW-A	PES-A	PSE	KPE-A	XPE	XME
Page No.		120	121	26	27	122	122	25	124	28	29
Voltage	DC12V			●	●			●		●	●
	DC24V	●	●	●	●	●	●	●		●	●
	AC24V					●	●				
	DC48V			●	●						
	AC100-230V			◎				◎		◎	◎
	AC100V					●	●		●		
	AC120V					●	●				
	AC200V					●	●				
	AC220V								●		
	AC230V					●	●				
Body Color	White	●	●		●	●	●	●	●		
	Silver		●			●					
	Black			●							
Transistor Input	PNP	●	●				●		●		
	NPN	●	●			●					
Sound Function						●					
IP Rating		65	23	66	55	54	23	23	23		
	w/Gasket		55				55				

LED Lights

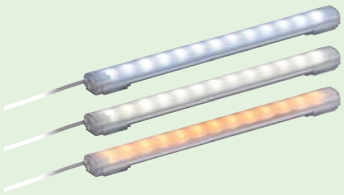

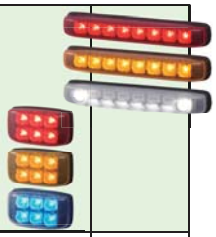

Model		CLA							CLK						CLN		LP3	LP5
									-AG	-AG	-AS	-SG	-AG	-AS	-(P)T	-(P)T		
Size (mm)		100	200	300	600	900	1200	1500	200	300			600		85x85		110	240
Page No.		156							158						20		30	31
Voltage	DC24V	●	●	●	●	●	●	●	●	●	●	●	●	●	●	●		
	DC12/24V																●	●
Body Material	Aluminum								●	●	●		●	●	●	●		
	Stainless Steel											●						
	Polycarbonate	●	●	●	●	●	●	●	●	●			●				●	●
Cover	Tempered Glass								●	●		●	●		●	●		
	PMMA Resin										●			●				
	Polycarbonate	●	●	●	●	●	●	●			●			●			●	●
Light Color	Daylight	●	●	●	●	●	●	●	●	●	●	●	●	●				
	Natural White	●	●	●	●	●	●	●	●	●	●	●	●	●	●	●		
	Warm White														●	●		
	Red																●	●
	Amber	●		●													●	●
	Blue																●	●
	White																	●
Resistance	Water	●	●	●	●	●	●	●	●	●	●	●	●	●	●	●	●	●
	Oil											●			●	●		
	Dust	●	●	●	●	●	●	●	●	●	●	●	●	●	●	●	●	●
IP Rating		66/67/69K							66G/67G/69K						66G/67G/69K		-	

Audible Alarms & Annunciators

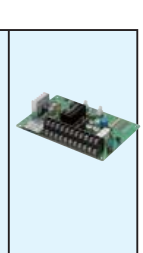

Model		BM	BM-H	BM-D	BD	BK	BSV	BDV	BKV	EHS	EHV	EWHS	FV-127JP
Page No.		162			164	166	176	178	180	22		168	182
Voltage	DC12V				●	●		●	●	●	●	●	
	DC24V	●	●	●	●	●	●	●	●	●	●	●	●
	AC24V	●	●	●									
	DC48V												
	AC100V	●	●	●	●	●		●	●	●	●	●	
	AC120V		●									●	
	AC200V											●	
	AC220V	●	●	●								●	
Body Color	Ivory White				●	●	●	●	●	●	●	●	
	Red											●	
	Yellow											●	
	Black	●	●	●			●	●	●	●	●		
	Silver						●						
Sound Function	dB (at 1m)	80	90	80	90	95	87	87	95	110	105/110	105	
	Melody/Alarm	●	●	●	●	●					●	●	
	MP3						●	●	●	●	●		●
Channel Inputs		2	2	2	4	8	4(15)	4(15)	5(31)	8(32)	8(63)	1	7(127)
Playback Sounds (sec)					32	32	63	63	63	31	63		480
Sound Reduction							●			●	●		●
Transistor Input	PNP	●			▲	▲	●					●	●
	NPN	●			●	●	●	●	●	●	●	●	●
IP Rating		-	-	34	54	54	54	54	54	54	54	53(65)	-

Hybrid Annunciators

Model		LKEH-FE	LKEH-FV	RFT	RFV	RT-FE	RT-FV	KJT
Page No.		186		188	190	192		194
Voltage	DC24V	●	●	●	●	●	●	●
	AC24V							●
	AC100V	●	●	●	●	●	●	●
	AC200V							●
	AC220V	●	●	●	●	●	●	
Sound Function	dB (at 1m)	105		90	90	105	105	95
	Melody/Chimes	●		●		●		●
	MP3		●		●		●	
Channel Inputs			32		15		8	4
Playback Duration (sec.)			63		63		32	16
Transistor Input	PNP	●	●		▲			
	NPN	●	●	●	●	●	●	●
IP Rating		53	53	54	54	23 (65)	23 (65)	23

Symbols Used in this Catalog

Light Source

LED

High-intensity LEDs with about 60,000 hours worth of service life and low power consumption that outlasts any bulb.

Daylight Warm White

Temperature Color LEDs with a service life longer than incandescent and flourescent, but with lower power consumption.

Bulb

Economical and readily available from PATLITE.

Halogen

Small and bright halogen bulb with long-life.

Sounds

Electronic Sound 1

Alarm with sounds that are easy to recognize and gentle on the ears.

85 dB at 1m

Maximum sound pressure level based on controlled environmental conditions and recorded contents (such as melodies, alarms or messages).

4 Channels

The number of channels available when dividing the total recording time to making several different messages.

63 Seconds

The maximum recording time using the standard bit rate for the product. (Standard bit rate is usually 64kb/sec)

Some of PATLITE's audible alarm products may contain copyrighted music or songs which Patlite has not applied for permission to use outside Japan, so please contact your local copyright association before using certain audible alarm products. This disclaimer may not apply if the copyright association has not claimed the copyright of the music or songs in a particular country or jurisdiction.

Protection Resistance

IP65K

Protection Resistance classification for dust-proof, water-proof, and water-jet resistance based on ingress protection index. (CEI/IEC 529).

Explosion-Safe

Meets ATEX, NEC, CE and most other applicable Explosion-Safe standards.

Specifications

Φ65

The diameter size to fit into solutions like compact sized installations to fit perfectly onto that machine.

Dual-face Reflector

The symmetrical dual-face reflectors emit a powerful rotating light.

Network

Use the latest technology in network protocol to communicate between product and machine or product-to-product.

SOUND VOICE

Products that emit sounds or voices, or both.

NPN/PNP Open-collector

Open collector allows direct connection to a PLC without the use of voltage-contact relays, etc.

Cable

Most products come with stranded wiring, but this corresponds to PATLITE products that offer cables as a standard or optional item.

Terminals

PATLITE now offers products that come with terminal connections to meet customer demands for easier wiring options.

MP3 ALARM VOICE

Sounds that are gentle on the ears in familiar sounds like melodies, and distinguishable alarms, along with MP3 programmable messages.

⚠ CAUTION For more details on these products, refer to the Instruction Manuals and specification sheets prior to use. Follow all safeguards to prevent fire, electric shock or other accidents. Specifications are subject to change without prior notice.

New Products

CLN

LED Work Light

Daylight
Warm White

IP66G/67G/69K

Water and Oil resistant high-power LED Work Light with an illuminance of 820 lx.
Industry's thinnest design at 22.2mm.

***The industry's first based on corporate investigation**

- Made of aluminum alloy and tempered glass which is resistant to water, oil and coolants.
- Special design disperses heat radiation with illumination to surpass a 40W light bulb.
- The product lineup includes two colors (Daylight, Warm White) and two bracket options of Tilt (forward and back) or Pan & Tilt (forward, back and swivel left & right) to adapt to various scenarios.
- The operating temperature range of -40 to +60°C allows installation in sub-freezing temperature environments, such as cold storage warehouses.
- Conforms to CE and RoHS requirements.
- UL Listed (File No. E306141).

How to Order

CLN-24-CD-PT

- Movable Type
  - T : Tilt
  - PT : Pan/Tilt
- Luminous Color
  - -CD (Daylight)
  - -CL (Warm White)

Specifications

Model		CLN-24-[_]-T		CLN-24-[_]-PT	
Color Code (Color)		CD (Daylight)	CL (Warm White)	CD (Daylight)	CL (Warm White)
Color Temperature (typ.)		6500K	2700K	6500K	2700K
Illumination (typ.) (Centered at DC 24V)	1m	820 lx	620 lx	820 lx	620 lx
Total Luminous Flux (typ.)		550 lm	330 lm	550 lm	330 lm
Rated Voltage		DC 24V (Polarized)			
Operating Voltage Range		DC 24V ±10%			
Protection Rating		IP66G/67G (JIS C 0920)/69K (DIN 40050 part 9) (excluding Cable ends)			
Mounting Location/Direction		Indoor / Any Direction			
Mass (Tolerance ±10%)		360g		430g	

Dimensions Unit: mm

- **Rear-mount Type (T/PT Type)**

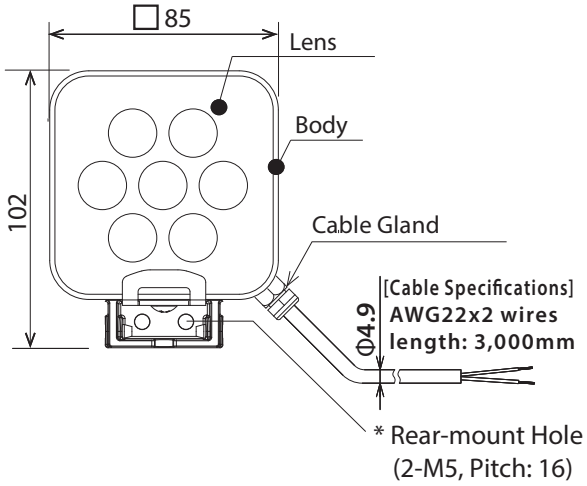

- **Tilt Type (T Type)**

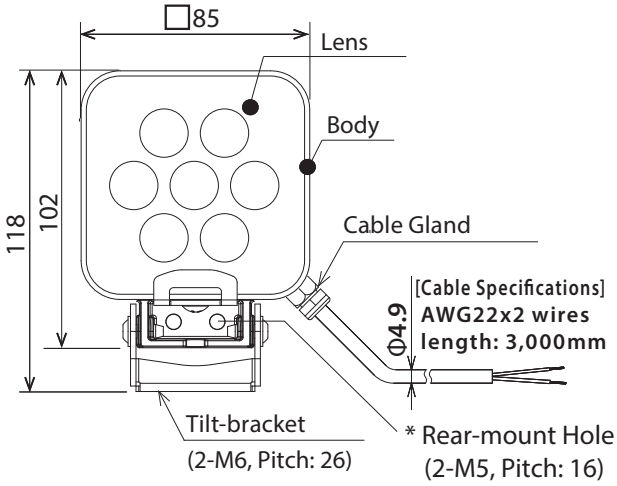

- **Pan/Tilt Type (PT Type)**

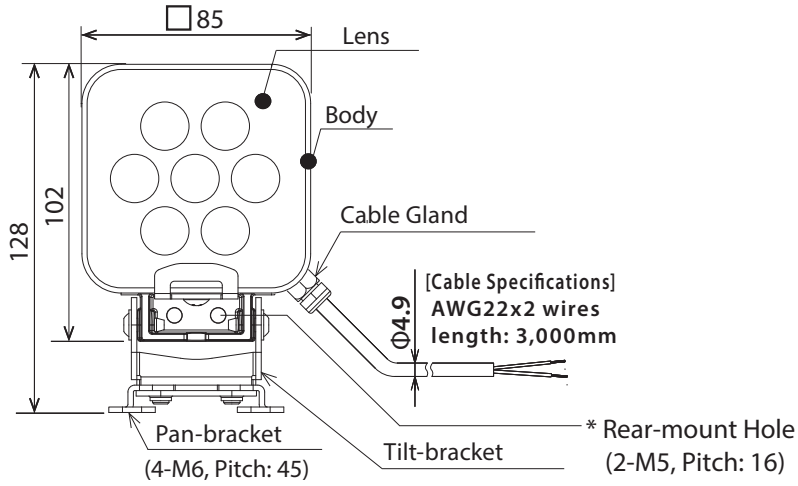

Features

Tilt Type (T Type)

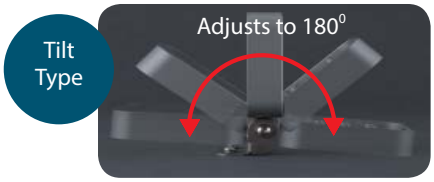

Has tilt adjustment of 180°, and can be folded up to a width of 33mm, making it easier to mount.

Floor Mount Example

Wall Mount Example

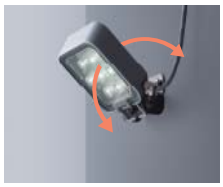

Ceiling Mount Example

Pan/Tilt Type (T Type)

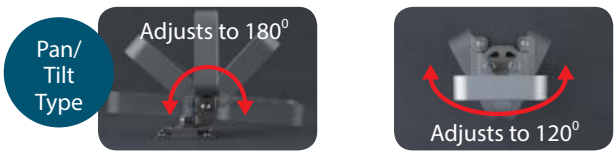

Has tilt adjustment of 180° with a pan angle of 120°, and can be folded up to a width of 43mm. Horizontal wall-mounting and free adjustment for any application.

Floor Mount Example

Wall Mount Example

Ceiling Mount Example

※ The tilt & pan/tilt brackets can also be removed for Rear Attachment applications.

EHS/EHV

MP3 Alert/Melody/Alarm Horn

110dB at 1m

EHV 63 Channels (Binary)

220 Seconds

IP65

NPN/PNP Open-collector

Cable

Terminal

Exceptional Sound Quality Field Programmable MP3 Melody/Alarm Horn

FEATURES

- EHS comes with 32 preloaded melody and alarm sounds with adjustable volume up to 110dB (@ 1m).
- EHV comes with 63 preloaded crisp and clear melody and alarm sounds with adjustable volume up to 110dB (@ 1m).
- EHV offers a field-programmable MP3 function with a maximum of 220 sec. of recording time (@ 64bps) and an adjustable volume up to 105dB (@ 1m).
- Ideal for plant-wide notification, public address and process control.
- Robust, indoor and outdoor use with vibration resistance up to 4.5G.
- Protection Rating of IP65.
- UL464, CSA-C22.2 NO.205-M1983, FCC Part 15 Subpart B Class 4.
- CE, RoHS Compliant (EHS-M1 and EHV-M1 Only).

EHS vs EHV (Functionality Comparisons)

Model	Onboard Sounds	MP3 Playback	Playback Modes	No. of Playback Channels
EHS	32 Sounds	No	1 Mode	8 ch Bit Input/ 32 ch Binary Input
EHV	63 Sounds	Yes*	4 Modes	8 ch Bit Input/ 63 ch Binary Input

* Internal Memory size of 2 Mbytes, maximum playback of 220 seconds at a 64kbit/sec rate

How to Order

EHS - □□E

Model
EHS: Melody/Alarm Horn

Rated Voltage
M1: DC 12-24V
M2: AC 100-240V
M3: DC 12-48V

Wiring Type
H: Cable
T : Terminal*

Melody/Alarm Type
E: Type E

EHV - □□G

Model
EHV: MP3 Alert Horn

Rated Voltage
M1: DC 12-24V
M2: AC 100-240V
M3: DC 12-48V

Wiring Type
H: Cable
T : Terminal*

Melody/Alarm Type
G: Type G

* Terminal type not available for EHS-M3 or EHV-M3

Dimensions

- Front View

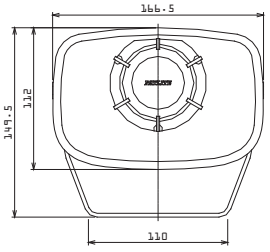

- Side View

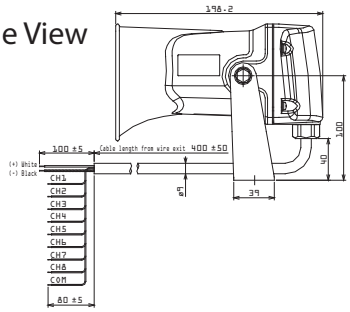

- Underside View

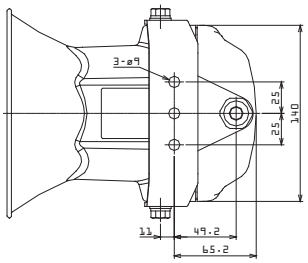

Wiring

- Non-voltage (NPN) Wiring

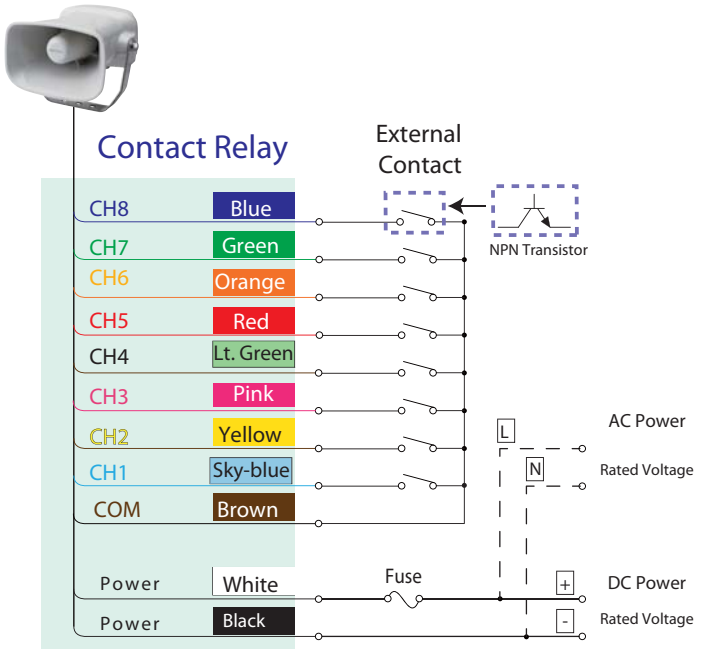

- PNP Wiring

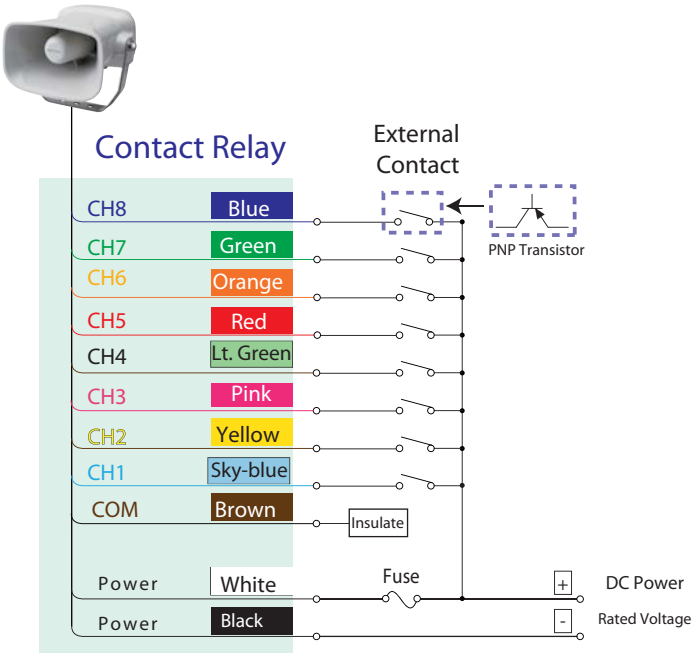

- Terminal (NPN)

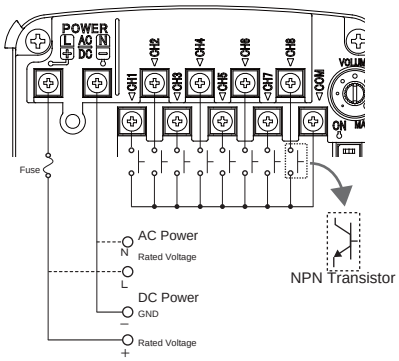

- Terminal (PNP)

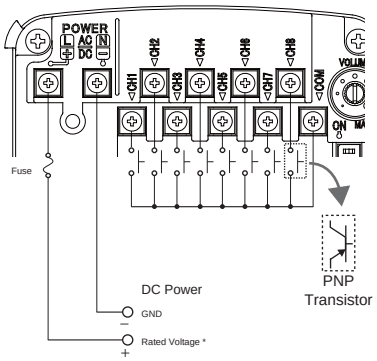

Transistor Capacity (NPN & PNP)	
Current Capacity	$I_C \geq$ 15mA
Current Leakage	$I_L \leq$ 0.1mA
Withstand Voltage	$V_C \geq$ 35V
ON Voltage(V_{sat})	Less than 1V

Recommended Fuse	
Rated Voltage	250V
Rated Current	1A
Fuse Type	Standard

Maximum Inrush Current	
EH□-M1	12.5A
EH□-M2	23.0A
EH□-M3	45.0A

Specifications

EHS

Model	Rated Voltage	Voltage Range	Power Consumption	Sound Pressure	Operating Temperature Range	No. of Playback Messages	Protection Rating	Wiring Type	Mass
EHS- M1H	DC 12 - 24V	DC 10.8V to 26.4V	5.0W (DC24V NPN, Non-voltage Contact) 5.9W (DC24V PNP, Voltage Contact)	Alarm: Max. 110dB (at 1m)	-20°C to +50°C (85% RH or less)	Bit Input: 8 Binary Input: 32	IP65	Cable	1.25kg
EHS- M1T								Terminal	
EHS- M3H	DC 12 - 48V	DC 10V to 60V	5.1W (DC48V NPN, Non-voltage Contact)					Cable	1.15kg
EHS- M2H	AC 100 - 240V	AC 90V to 264V	6.9W (AC240V NPN, Non-voltage Contact)					Cable	1.25kg
EHS- M2T								Terminal	

EHV

Model	Rated Voltage	Voltage Range	Power Consumption	Sound Pressure	Operating Temperature Range	No. of Playback Messages	Protection Rating	Wiring Type	Mass
EHV- M1H	DC 12 - 24V	DC 10.8V to 26.4V	4.0W (DC24V NPN, Non-voltage Contact) 5.0W (DC24V PNP, Voltage Contact)	Alarm: Max. 110dB (at 1m) MP3: Max. 105dB (at 1m)	-20°C to +50°C (85% RH or less)	Bit Input: 8 Binary Input: 63	IP65	Cable	1.25kg
EHV- M1T								Terminal	
EHV- M3H	DC 12 - 48V	DC 10V to 60V	5.6W (DC48V NPN, Non-voltage Contact)					Cable	1.15kg
EHV- M2H	AC 100 - 240V	AC 90V to 264V	5.3W (AC240V NPN, Non-voltage Contact)					Cable	1.25kg
EHV- M2T								Terminal	

Note 1: The sound pressure level is based on measurements under controlled conditions (voice-synthesized 1 kHz sine wave played back from a distance of 1 meter), therefore the surrounding environmental conditions and message content will result in different values for the sound pressure level.

Note 2: Even when starting two or more units simultaneously, a lag will occur during message playback.

- 4 Playback Modes

Normal Playback	Designated audio message is played back by distinctive signal input. Audio message is played back once in case of one shot input, and audio message is repeated when the signal is input continuously.
Latest Input Priority Playback	When a signal is input during a message playback, the current message playing back will be stopped, and the message of the signal input will be played instead.
Memory Playback	Up to 23 audio message inputs can be memorized in order of input. After one playback is finished, the next memorized audio message will be played back. The inputs exceeding the limit will not be memorized.
Momentary Playback	Audio message is played back only while the signal input is maintained. Playback will be stopped when the signal input is stopped.

Get the Playlist Editor 2 (free from PATLITE)

- Contact us by E-mail located on the back of this catalog.
- Convert any message into MP3 data and save it onto an SD Card (with the use of the Playlist Editor 2).
- Insert the SD Card into a PATLITE MP3 product for easy programming.

Application Software	Usable	Outline
PATLITE Playlist Editor 2	Yes	This is a newer version of the PATLITE Playlist Editor. A playlist package can be created and the MP3 data and channel function assignment for the product can be rewritten.
FV-Win	No	This product is not compatible with the playlist created by FV-Win or the PATLITE Playlist Editor. However, the playlist can be changed into a playlist package using the PATLITE Playlist Editor 2.
PATLITE Playlist Editor	No	

Type-F (For Japan Only)

Beep (slow intermittent)	Spring Melody	A Maiden's Prayer	Itsy Bitsy Spider	BANZAI SUKIDE YOKATTA
Stutter (rapid intermittent)	Game Intermission	Bach Minuet in Gmaj	The Music Man	NAMONAKI UTA
Bell (clear high-pitch)	Jalopy Horn	Annie Laurie	Spanish Romance	SOUSEINO AKUERION
Yelp (rapid siren)	Galactic Doorbell	London Bridge is falling down	Katyusha	MAMBO NO 5
Rapid Hi-Lo	RR-crossing	Holdiridia	Ave Maria	The Parade of the Tin Soldiers
Melody Chime	Digital Train Whistle	Mary had a little Lamb	Grandfather's Clock	Turkey in the Straw
Synthesized Piano	Train Ride	The Camptown Races	RHYTHM AND POLICE	Aka tombo
Synthesized Bell	Starting Notice Chime1	Cuckoo Song	ZANKOKUNA TENSHINO TEEZE	Funiculi, Funicula
Stutter + Bell	Starting Notice Chime2	MURANO KAJIYA	MAJINGAA ZETTO	Furusato
Melody Chime	Starting Notice Chime3	On the Bridge of Avignon	HATARAKU KURUMA	Beautiful Dreamer
Chime	Ending Notice Chime1	Daydream Believer	NINGENTTE IINA	JOLLY HOLIDAY
Call Sign	Ending Notice Chime2	Amaryllis	ROBINSON	
Galactic Hovercraft	Fur Elise	Mozart Symphony No. 40	WORLD FOOTBALL ANTHEM	

Type-G (All Countries)

Beep (slow intermittent)	Galloping Hi-Lo	Galactic Doorbell	Mozart Symphony No. 40	Polka Tramblanka
Stutter (rapid intermittent)	Alien Chatter	RR-crossing	Ave Maria	O Vreneli
Bell (clear high-pitch)	Falling Crystals	Starting Notice Chime1	Grandfather's Clock	KAERUNO GASSHOU
Yelp (rapid siren)	Inverted Reveille	Starting Notice Chime2	The Parade of the Tin Soldiers	El Condor Pasa (If I Could)
Rapid Hi-Lo	Galactic Motor	Ending Notice Chime1	If You're Happy and You Know It	Hungarian Dance No.5
Melody Chime	Ringing Phone	Ending Notice Chime2	Flea Waltz	William Tell Overture
Synthesized Piano	Two Tone	Fur Elise	Turkey in the Straw	Pomp and Circumstance
Synthesized Bell	Alarm Clock	Bach Minuet in Gmaj	The Battle Hymn of the Republic	Comedians' Galop
Stutter + Bell	Ringing Hi-Lo	Annie Laurie	J'ai perdu le do de ma clarinette	Nedelka
Melody Chime	Galactic Hovercraft	London Bridge is falling down	Can-can	Moonlight Serenade
Chime	Spring Melody	Mary had a little Lamb	Radetzky March	WAREWA UMINO KO
Call Sign	Game Intermission	The Camptown Races	Funiculi, Funicula	
Train Ride	Jalopy Horn	Amaryllis	Csikos Post	

Type-A (For Japan Only)

Beep (slow intermittent)	Stutter (rapid intermittent)	Bell (clear high-pitch)	Yelp (rapid siren)
Rapid Hi-Lo	Melody Chime	Synthesized Piano	Synthesized Bell
Stutter + Bell	Synthesized Melody Chime	Chime	Call Sign
Fur Elise	Maiden's Prayer	Bach Minuet in Gmaj	Annie Laurie
London Bridge is falling down	Hol-di-ri-Dia	Mary had a little Lamb	Camptown Races
Cuckoo Song	Village Blacksmith	On the Bridge of Avignon	Daydream Believer
Amaryllis	Mozart Symphony No. 40	Quiet Lakeside	Ich bin ein Musikante
Spanish Romance	Katyusha	Grandfather's Clock	Ave Maria

Type-C (For Japan Only)

Beep (slow intermittent)	Stutter (rapid intermittent)	Bell (clear high-pitch)	Yelp (rapid siren)
Rapid Hi-Lo	Melody Chime	Synthesized Piano	Synthesized Bell
Stutter + Bell	Synthesized Melody Chime	Chime	Call Sign
Can't take my eyes off of you	Top of the World	The Entertainer	Amazing Grace
Amairono Kamino Otome	Les Champs-Elysees	Canon	Rara Sunshine
Uchuusenkan Yamamoto	Oshiete	Makenaide	Gonna Fly Now (Theme from "Rocky")
I don't Wanna Miss a Thing	Yozorano Mukou	Aiwa Katsu	Haruyo Koi
Gattsudaze	Odoru Ponpokorin	Imasugu Kisu Mi	Truth

Type-D (For Japan Only)

Beep (slow intermittent)	Stutter (rapid intermittent)	Bell (clear high-pitch)	Yelp (rapid siren)
Rapid Hi-Lo	Melody Chime	Synthesized Piano	Synthesized Bell
Runner	Mamotte Agetai	Chime	Call Sign
Iribiao Kikinagara	September	Doyoubino Koibito	Akino Kehai
Saafu Tengoku Sukii Tengoku	Iro White-blend	Happy Birthday	Hi Ho
I've been working on the Railroad	The Bear Song	Toys Go "Cha-cha-cha"	Konnako Irukana
Schubert's Lullaby	Rudolph the red-nosed Reindeer	She Wore a Yellow Ribbon	My Darling, Clementine
Yellow Rose of Texas	Yankee Doodle	When the Saints Go Marching In	Londonderry Air

Type-E (All Countries)

Beep (slow intermittent)	Stutter + Bell	Inverted Reveille	Annie Laurie
Stutter (rapid intermittent)	Melody Chime	Galactic Motor	London Bridge is falling down
Bell (clear high-pitch)	Chime	Ringing Phone	Mary had a little Lamb
Yelp (rapid siren)	Call Sign	Two Tone	Camptown Races
Rapid Hi-Lo	Train Ride	Alarm Clock	Amaryllis
Melody Chime	Galloping Hi-Lo	Ringing Hi-Lo	Mozart Symphony No. 40
Synthesized Piano	Alien Chatter	Fur Elise	Ave Maria
Synthesized Bell	Falling Crystals	Bach Minuet in Gmaj	Grandfather's Clock

Use of Copyrighted Material

PATLITE Corporation has not applied for permission to use certain copyrighted music or songs recorded for Type-A, Type-C, Type-D and Type-F melody charts outside of Japan. Therefore, please contact the local copyright association for permission before using the product in case this product is used outside of Japan. Melody charts Type-E and Type-G are recommended for use outside of Japan as this playlist does not include copyrighted music or songs, and permission is not required.

PSE

LED Signal Light

LED

IP23

Φ82

New LED flashing beacon! Can outlast a conventional Xenon lamp and is available in four LED Colors.

Dimensions

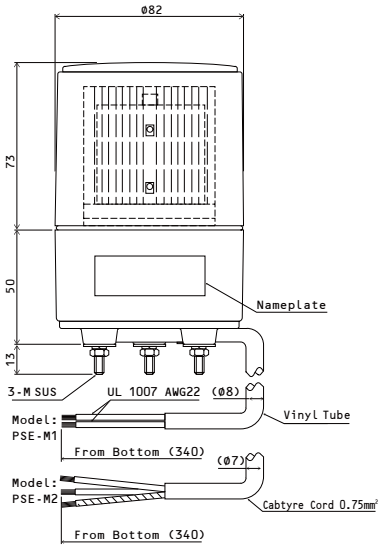

Wiring

- M1 Type

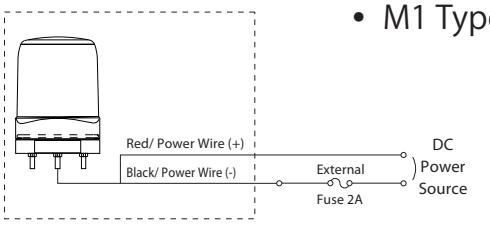

- M2 Type

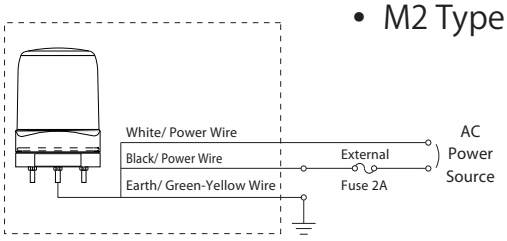

Specifications

Model	PSE-M1	PSE-M2
Rated Voltage	DC 12V - 24V	AC 100V-240V
Power Consumption	2.4W (max.)	3.2W (max.)
Maximum Operating Ambient Temperature	60°C	
Protection Rating	IP23	
Mounting Location	Indoor or Outdoor Use	
Flash Rate	110 ±10rpm (Triple-flash)	
Mass	0.30kg	0.35kg

How to Order

PSE-□-□

Rated Voltage
M1: DC 12V-24V
M2: AC 100V-240V

Color
R: Red
Y: Amber
G: Green
B: Blue

LFH

LED Signal Light

RoHS

LED

IP66

Φ100

New LED flashing beacon! Available in five outdoor visible LED Colors and has UL certification.

Dimensions

- LFH

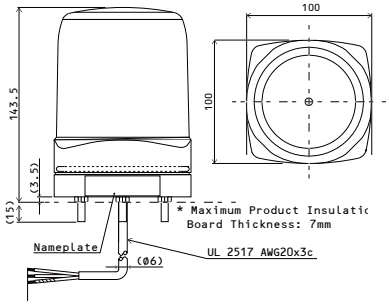

- LFH-M1

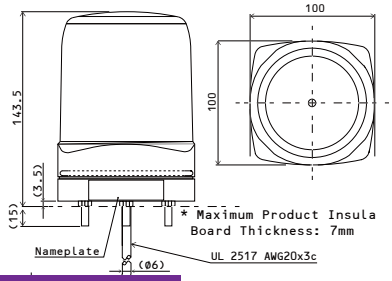

Wiring

- LFH

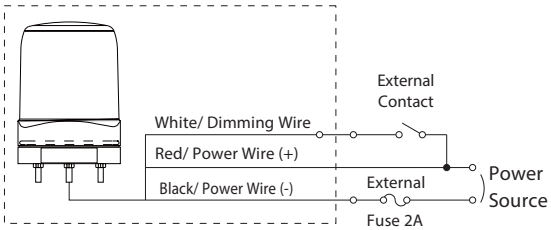

- LFH-M1

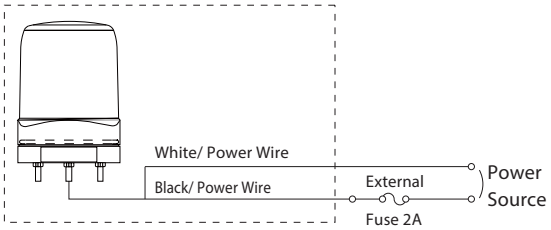

Specifications

Model	LFH-12	LFH-24	LFH-48	LFH-M2
Rated Voltage	DC 12V	DC 24V	DC 48V	AC 100 - 240V
Current Consumption (max)	0.50A	0.23A	0.18A	0.12A
Operating Ambient Temperature Range	-30°C to +70°C			-20°C to +60°C
Protection Rating	IP66			
Mounting Location	Indoor or Outdoor Use			
Flash Rate	110 ±10fpm (Triple-flash)			
Certifications	UL, CE*1, RoHS, FCC			
Mass	0.57kg			0.61kg

*1 LFH-48 not CE certified.

How to Order

LFH- □ - □

Rated Voltage
- 12: DC 12V
- 24: DC 24V
- 48: DC 48V
- M2: AC 100 - 240V

Color
- R: Red
- Y: Amber
- G: Green
- B: Blue
- C: Clear/White

LFK

LED Signal Light

LED

IP55

Φ100

New LED flashing beacon! So bright, it has a dimming input.

Dimensions

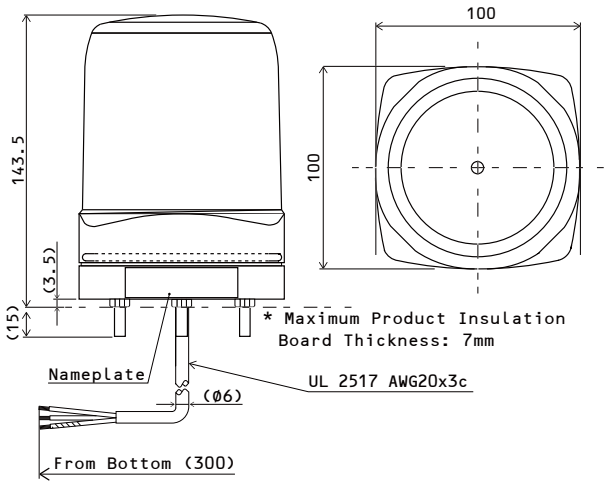

Wiring

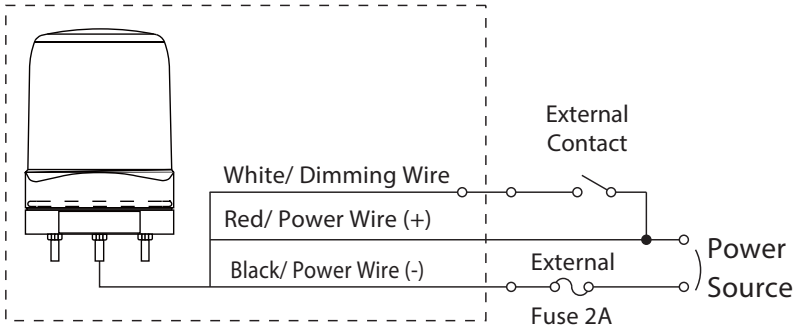

Specifications

Model	LFK-12S	LFK-24S	LFK-48S
Rated Voltage	DC 12V	DC 24V	DC 48V
Current Consumption (max)	0.49A	0.19A	0.17A
Operating Ambient Temperature Range	-20°C to +60°C		
Protection Rating	IP55		
Mounting Location	Indoor or Outdoor Use		
Flash Rate	140 ±14fpm (Triple-flash)		
Certifications	CE*1, RoHS, ECE		
Mass	0.5kg		

*1 LFK-48 not CE certified.

How to Order

LFK-□S-□

Rated Voltage
- 12: DC 12V
- 24: DC 24V
- 48: DC 48V

Color
- R: Red
- Y: Amber
- G: Green
- B: Blue
- C: Clear/White

XPE

LED Signal Light

LED

IP23

Φ162

New LED flashing beacon! Available in four LED Colors.

FEATURES

- Long-lasting LED's greatly reduce maintenance costs.
- Indoors allows upright, inverted, and sideways installation; outdoors allows upright installation only.
- Main Body is made of impact and heat-resistant ABS resin.
- Dome lens is made of superior weather-resistant and light-translucent AS resin.
- Available Colors are Red, Amber, Green, and Blue.

Specifications

Model	XPE-12	XPE-24	XPE-M2
Rated Voltage	DC 12V	DC 24V	AC 100 - 230V
Voltage Range	DC 9.5-15V	DC 20 - 28V	AC 90 - 250V
Current Consumption	0.50A	0.23A	0.12A
Operating Ambient Temperature	-30°C to +70°C		-20°C to +60°C
Protection Rating	IP23		
Mounting Location	Indoor or Outdoor Use		
Flash Rate	110 ±10fpm (Triple-flash Pattern)		
Certifications	RoHS		

How to Order

XPE-□-□

Rated Voltage
- 12: DC 12V
- 24: DC 24V
- M2: AC 100 -230V

Color
- R: Red
- Y: Amber
- G: Green
- B: Blue

XME

LED Signal Light

LED

IP23

Φ187

New Large Sized LED flashing beacon! Available in three LED Colors.

FEATURES

- Extended product lifespan by using LED lights.
- Indoors allows upright, inverted, and sideways installation; outdoors allows upright installation only.
- Main body is made of a melamine baked finish with a corrosion-proof stainless steel (SUS 304) lens mounting fixture.
- Dome lens is made of superior weather-resistant and light-translucent AS resin.
- Mounting Bolts are drip-proof and made of rust-free stainless steel.
- Available Colors are Red, Amber, and Blue.

Specifications

Model	XME-12	XME-24	XME-M2
Rated Voltage	DC 12V	DC 24V	AC 100 - 230V
Voltage Range	DC 9.5-15V	DC 20 - 28V	AC 90 - 250V
Current Consumption	0.50A	0.23A	0.12A
Operating Ambient Temperature	-30°C to +70°C		-20°C to +60°C
Protection Rating	IP23		
Mounting Location	Indoor or Outdoor Use		
Flash Rate	110 ±10fpm (Triple-flash Pattern)		
Certifications	RoHS		

How to Order

XME- □ - □

Rated Voltage
12: DC 12V
24: DC 24V
M2: AC100 - 230V

Color
R: Red
Y: Amber
B: Blue

LP3

LED Signal Light

LED

How to Order

LP3- M1□-□

- Size: 3: 110mm × 60mm (Lighting Body Dimensions)
- Rated Voltage: M1: DC 12-24V (Vehicle Onboard Use)
- Terminal Resistor: Blank: With; S : Without
- Color: R: Red; Y: Amber; B: Blue

Wiring Example (Cascading)

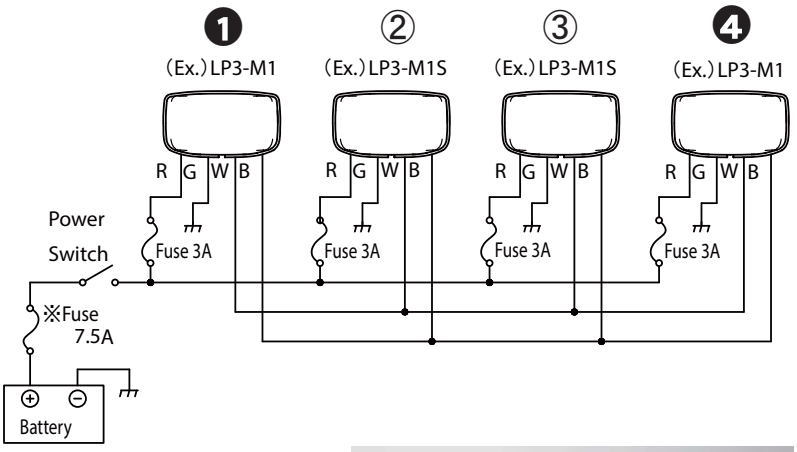

Dimensions

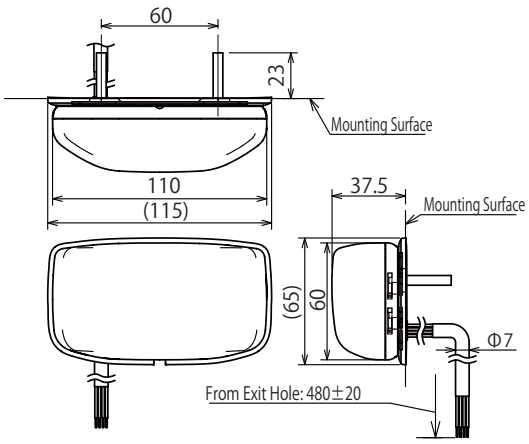

Specifications

Model	Rated Voltage	Operating Voltage Range	Current Consumption	Flash Pattern	Operating Temperature Range	Color	Mass
LP3-M1	DC12/24V	DC 9.5 - 30.0V	Max.: 0.7A	Triple-flash	-30°C - +75°C	Red, Amber, Blue	250g

LP5

LED Signal Light

LED

Wiring Example (Individual)

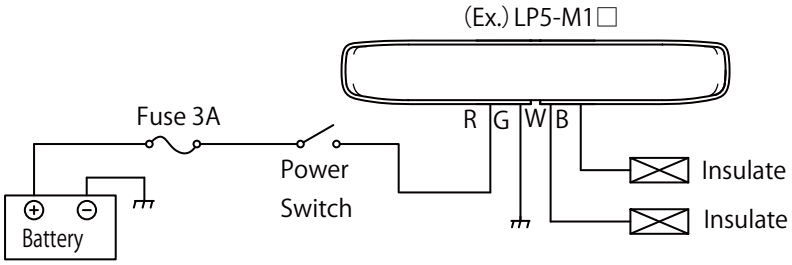

How to Order

LP5 - M1□-□

- Size: 5: 240mm × 35mm (Lighting Body Dimensions)
- Rated Voltage: M1: DC 12-24V (Vehicle Onboard Use)
- Terminal Resistor: Blank: With; S : Without
- Color: R: Red; Y: Amber; W: White

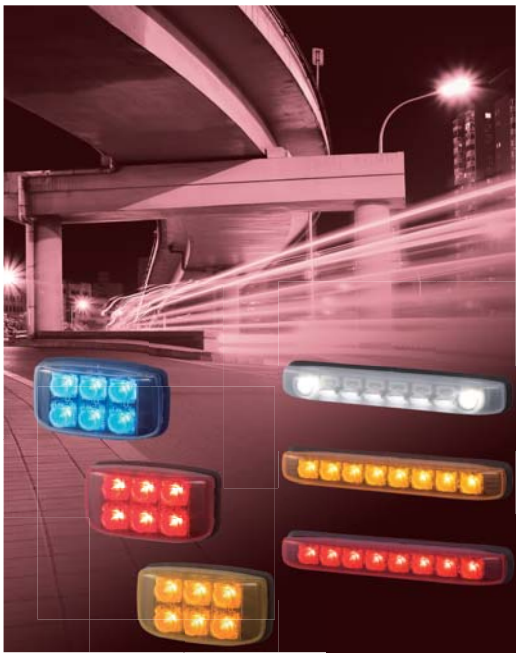

Dimensions

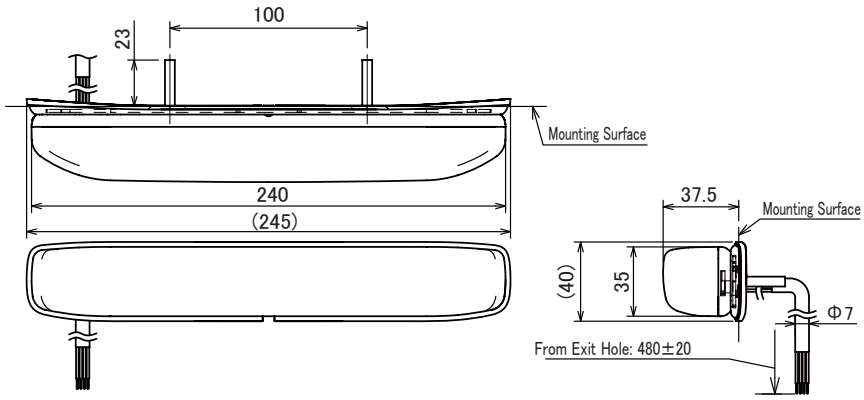

Specifications

Model	Rated Voltage	Operating Voltage Range	Current Consumption	Flash Pattern	Operating Temperature Range	Color	Mass
LP5-M1	DC12/24V	DC 9.5 - 30.0V	Max.: 0.7A	Triple-flash	-30°C - +75°C	Red, Amber	300g
LP5-M1-W				Continous Lighting		White	

MEMO

Network Products

WD

Wireless Data Acquisition System

RoHS CE

WDT-6M Φ60 Fits LME

WDT-5E Φ50 Fits LE

Network

Monitor remotely and collect data wirelessly from a PATLITE Signal Tower

PATLITE wireless add-on modules and receivers make PATLITE Signal Towers capable of sending electrical signals over a wireless network to a data center. PATLITE wireless add-on modules and receivers are a uniquely practical and economical solution for data acquisition, machine status remote monitoring, and supervisory control of industrial processes. The "AirGRID" is an effective solution for lean manufacturing and a visual factory. PATLITE wireless add-on modules comply with IEEE802.15.4, operating in the 2.4 GHz band.

1) Simply add-on to a PATLITE Signal Tower
   Operating conditions of Patlite signal towers installed on production machines or process systems can be transmitted wirelessly to a data center. Data acquisition and remote monitoring are possible instantly and economically.

2) Wireless technology of today eliminates tedious wire installation
   The "AirGrid" add-on wireless modules tap their power from the PATLITE Signal Towers and transmit their electrical signals to the data center. This can reduce wiring, component installation and other related costs.

3) Multi-hopping topology and high transmitting reliability
   With wireless multi-hopping, it minimizes potential transmitting failures or errors, adding a high level of stable operation and transmission reliability.

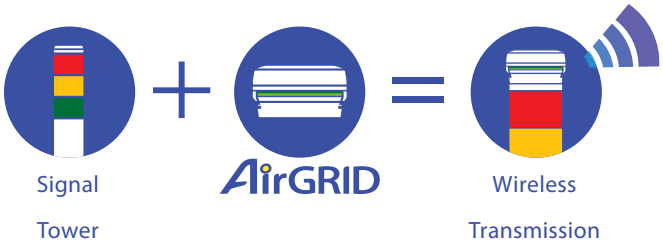

Dimensions

WDR-LE

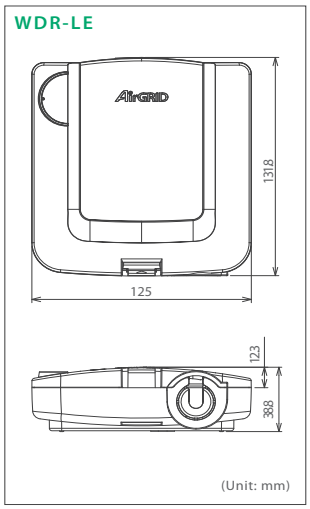

WDT-6M

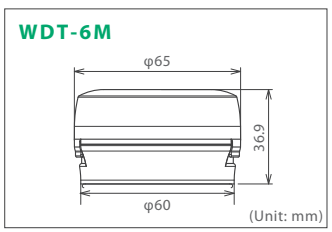

WDT-5E

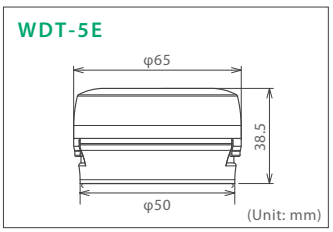

Typical Applications

- Multiple stand-alone machines can be networked by the AirGrid for data archiving and remote monitoring.
- The status and condition of the machines are indicated by the PATLITE signal towers.

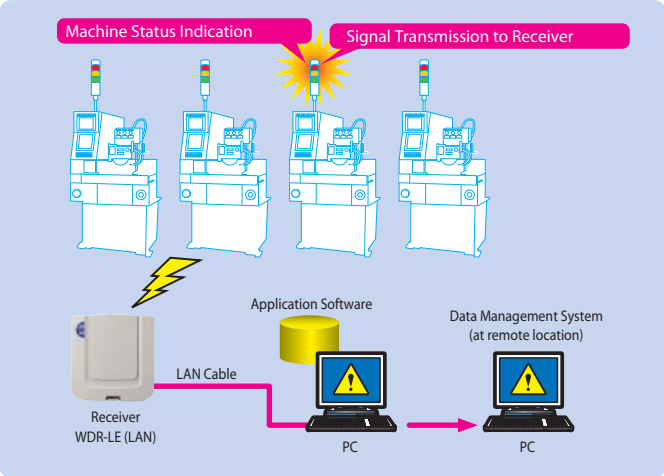

Wireless Concept IEEE 802.15.4 2.4GHz

- Wireless hopping/routing functions and mesh topology can make flexible and reliable wireless network configurations possible.
- Data archived by the AirGRID is stored in a file format CSV which any off-the-shelf data management software e,g, SCADA can handle.

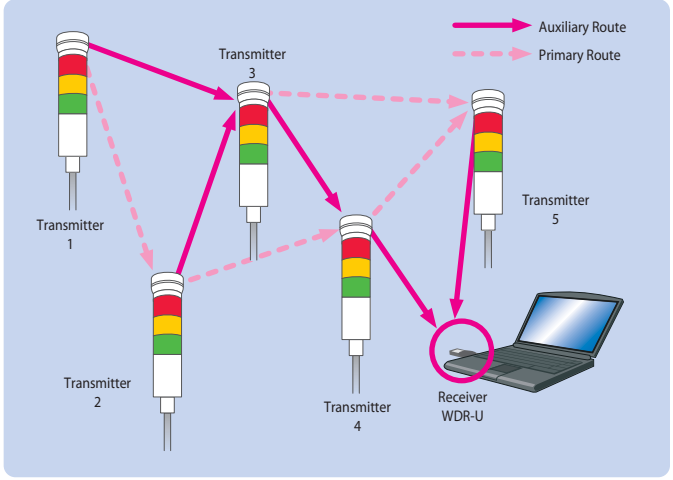

Network Connection Condition

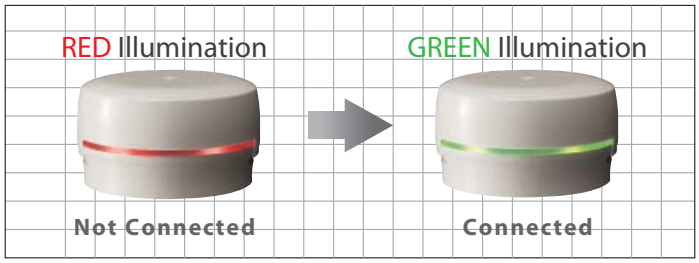

※ The transmitter is designed for PATLITE Model Series LME and LE Signal Towers. (As of Dec, 2012)

Transmitter Installation

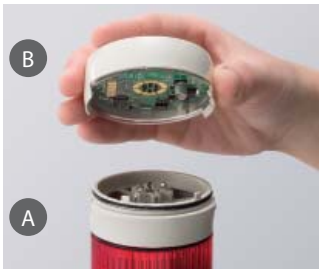

Affix the transmitter adaptor (A) on the Signal Tower and fasten it with the center screw. Then simply attach the transmitter (B) to the bracket. (Some applications don't require additional wiring.)

Specifications

Transmitters

Model	WDT-6M	WDT-5E
Applicable Signal Tower	Φ60 LME Series	Φ50 LE Series
Rated Voltage	DC 24V (No Polarity)	
Voltage Range	20.4V - 26.4V DC	
Current Consumption	35mA	
Operating Temperature	-10°C - +60°C (No Condensation)	
Storage Temperature	-20°C - +70°C (No Freezing)	
Relative Humidity	RH 85% or less	
Mounting Direction	Upright Position (Indoors Only)	
Protection Rating	Determined by PATLITE Signal Tower IP Ratings	
Dimensions (mm)	Φ65 x 36.9	Φ65 x 38.5
Mass	55g	

Ask your PATLITE Sales Representative for AirGrid compatable PATLITE Signal Towers

Receiver

Model	WDR-LE (LAN/USB)
Rated Voltage	DC 24V (Power Supply not included)
Voltage Range	DC 20.4V - 26.4V
Current Consumption	150mA
Operating Temperature	-10°C - +60°C (No Condensation)
Storage Temperature	-20°C - +70°C (No Freezing)
Relative Humidity	RH 85% or less
Mounting Direction	Horizontal, Wall-mount (Indoors Only)
Protection Rating	IP20
Dimensions (mm)	131(H)x125(W)x38.5(D)
Mass	165g

Features

Wireless Standard	IEEE 802.15.4 for Zigbee 2.4GHz
Frequency Bandwidth	2,400MHz - 2,483.5MHz (16 Channels at 5MHz Step starting from 2,405MHz)
Networking Connections	up to 20 Units (*1)
Antenna Output	Maximum 1mW
Compliances	FCC, CD (R&TTE), RoHS
(*1) Number of possible Units to connect is based on the wireless environment and installation location	

* This product operates on a frequency in compliance to FCC laws in the United States and its territories. Radio Laws for individual countries vary, and it is, therefore, the responsibility of the customer to comply with the laws in the country which applies to the application. Our company takes no responsibility directly, or indirectly, for claims from a customer or third party regarding Radio Laws or Wireless ordanance.
* This product requires application software for configuration and data acquisition. For more information on the latest software and solution to fit the application, please contact your nearest PATLITE Sales Representative indicated on the backside of this Catalog.

NHL

Network Monitor Signal Tower

RoHS CE

LED

4 Alarm Sounds

80db at 1m

Φ60

Network

Network Monitoring With a New Look

- Not dependent upon the OS.
- Supports common protocols such as HTTP, SMTP, SNMP and includes RSH.
- Easily works with NMS (network management/integration / monitoring) software, etc.
- Easily controllable by the SNMP SET command and RSH commands.
- Conforms to the CE requirements. (AC Adaptor does not carry the CE mark.)
- Four different alarm sounds can be correlated to match the prioritized monitoring level.
- Contains the ICMP protocol so PING monitoring can be set up for a maximum of 24 nodes.
- Using the IP Address of the NHL Tower, detailed setup functions can be accessed via a browser.

How to Order

NHL-3FB1□-RYG

- Model
- Tiers: 3
- AC Adaptor: U: Included, N: Not Included
- Lens Color: R: Red, Y: Amber, G: Green, B: Blue, C: Clear/White (Top to bottom)

Dimensions

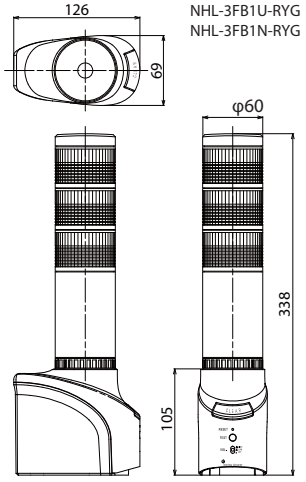

Upright Base
(Standard Item)

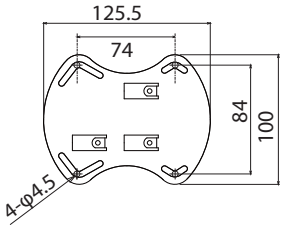

Specifications

Model		NHL-3FB1U-RYG						NHL-3FB1N-RYG
AC Adaptor	Rated Voltage	AC 100V to 240V						-
	Operating Voltage Range	AC 90V to 264V						-
Main Unit	Rated Voltage	DC 24V						
	Power Consumption	Unit	Red	Amber	Green	Blue	White	Buzzer
		2.0W	1.5W	1.5W	0.8W	0.8W	0.8W	2.0W
Operating Temperature Range		0°C - +40°C						
Storage Temperature Range		-10°C - +60°C						
Relative Humidity		RH of 20 to 80% (No Condensation)						
Vibration Resistance		19.6m/s^2						
Protection Rating		IP20 (Not Waterproof)						
Alarm Sound	Audio Level	Three-position switch for "HIGH", "LOW", "OFF" "HIGH": 80dB or more "LOW": 70dB or less (Tested at 1m from diaphram in upright position)						
	Tone Pattern	Four distinctive patterns: (Slow Intermittent), (Fast Intermittent),(Fast Burst), (Continuous)						
Switches	"CLEAR"	Pushbutton Switch						
	"TEST"	Pushbutton Switch						
	"RESET"	Pushbutton Switch						
	"BUZZER"	Slide Switch						
Communication Method	Ethernet	Physical Layer: 10BASE-T/100BASE-TX (Auto-negotiation/Full Duplex/ Half Duplex)						
		Data Link Layer: CSMA/CD						
		Network Link Layer: IP / ARP / ICMP						
		Transport Layer: TCP / UDP						
		Application Layer: HTTP / RSH / SMTP / SNTP / POP / DNS / NTP / DHCP / Socket						
Mounting	Location	Indoors Only						
	Direction	Desktop or Wall-mount in the Upright Position						
Mass (AC Adaptor not included)		800g						
Accessories		AC Adaptor, Rubber Feet, Adhesive Tape, Support Base						Rubber Feet, Adhesive Tape, Support Base

Easy Integration for many system applications

PING Device Monitor

Monitors Device Existence on the Network

The NH Tower initiates PING interaction with network devices to verify existence of up to 24 nodes. When the response to a PING fails, a warning with light and sound occurs to alert administrators.

Among the 24 nodes, 12 nodes (13th - 24th) can be set up for more detailed monitoring parameters.

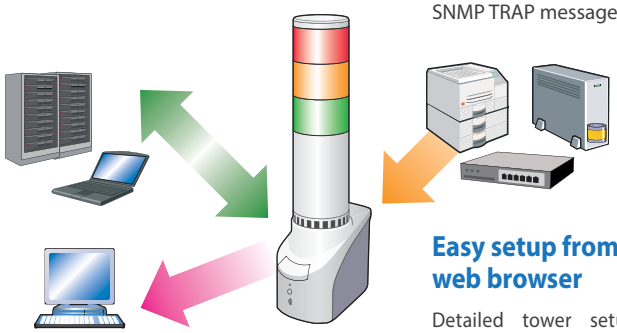

Application Monitor

The tower can monitor important background applications and signal the administrator upon any failure.

SNMP v1·v2c

Monitor networking equipment at a low cost

Many network devices (UPS, printers, routers, switches, etc.) generate SNMP TRAP messages when a failure occurs. The NHL tower can trigger a light and sound signal based on these SNMP TRAP messages to alert the administrator.

It can distinguish the various TRAPS. Register up to 16 groups (4 nodes per group).

Easy setup from a web browser

Detailed tower setup is accessed from a web browser directly to its IP Address. Firmware can also be upgraded remotely.

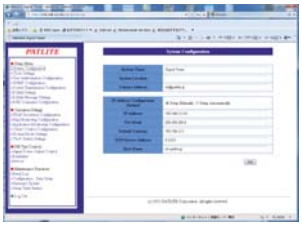

Web Setup Screen

Communication Commands for many customized applications

RSH

The RSH protocol is flexible with easily controllable commands.
With the use of Network integrated management software; event information obtained from various monitoring tools etc., can be used as a trigger to cause a combination of flashing and alarm patterns to sound in synchronicity with the event.

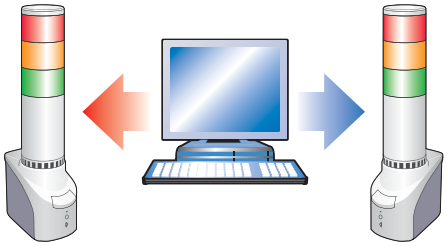

Event Occurence: Command Tier to light, alarm to sound.
RSH Example Code: rsh 192.168.10.1 -l root alert 111001

SOCKET Transmission

PHN Command Compatibility

Controlled with 2 byte commands.

* Compatible with NHE-3FB, NHC-3FB, NHM-3FB, and PHN-3FBE1.
* Some functionality is limited.

Event Occurence:
Command Tier to light, alarm to sound
PHN Example Code: 0x57,0x17

New PNS Command Compatibility

The PNS command can be used to control all pattern information.

*** The PNS command is a unique command from PATLITE.**

Event Occurence: Command Tier to sound alarm
PNS Example Code:
0x58,0x58,0x53,0x00,0x00,0x06,0x01,0x01,0x01,0x00,0x00,0x01

Diagnostic / Reporting/ Notification Features

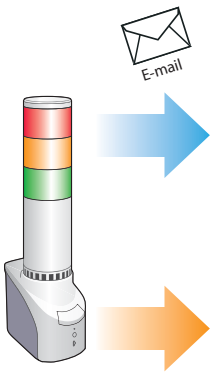

E-mail Transmission

Send e-mail with a maximum of eight selectable events

Up to eight events can be created and sent as a secure e-mail with the subject name and text corresponding to the event.

SNMP v2c

SNMP TRAP Transmission

Can transmit from a maximum of eight network devices.

Self-diagnosis

The test switch on the front of the Body can check the Signal Tower and alarm operation functions easily without it being controlled through the network.

Options

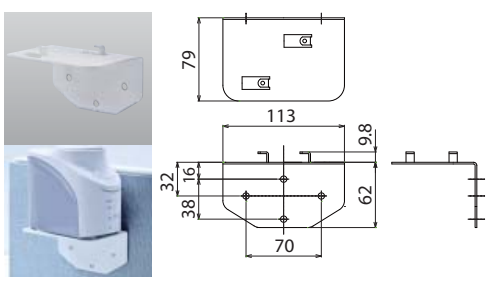

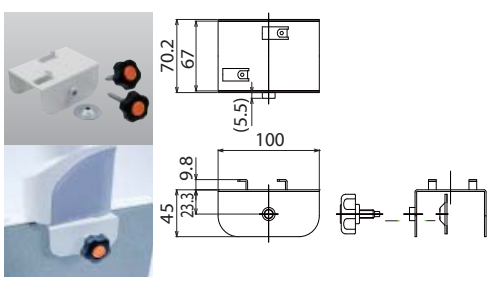

LE-K3/WEP-K3

CompoNet Supported

LED

2 Alarm Sounds (LE)

90db at 1m

1 Alarm Sound (WEP)

85db at 1m

IP23

Network

DeviceNet Supported Signal Tower for Open-field Network

FEATURES

- Single cable uses CompoNet cable only, which transfers power and signals for control.
- Easy connection directly to 64 linkable CompoNet units with DeviceNet cable, without I/O terminals.
- Requires a CompoNet controller (i.e. CompoNet Master).
- Address Data Storage setting with the internal DIP switch.
- Light Pattern is continuous only, no flashing available.
- Built-in alarm for B-type models such as; LE: 85dB at 1m (adjustable), WEP: 90dB at 1m.
- Sound Patterns available are; LE: Intermittent tone, Alarm 1: short beep, Alarm 2: long beep. WEP: 1 alarm, continuous tone only.
- Models include interchangeable modules*, no re-wiring necessary, even after installation (except for WEP type).

*Refer to the standard models for details.

DIRECT MOUNT

LE-K3W
LE-K3BW

POLE MOUNT

LE-K3P
LE-K3BP

- PATLITE's exclusive Prism-Cut Lens designed for enhanced visibility from any direction and distance.
- Original Dual Reflection System for enhanced light diffusion; creating bright, distinctive illumination while saving energy.
- Direct or pole mount installation.
- Main body is constructed of ABS resin with superior resistance to impact and heat.
- Lens is made of superior impact resistant and light translucent AS resin.

WEP-K3
WEP-K3B

- Clear vertical-cut lens for enhanced illumination over a wide perspective.
- Installation can be vertical and horizontal (Alarm type must have buzzer installed face-down).
- Lens made of superior impact and heat resistant polycarbonate resin for superior durability and enhanced illumination.

Application Example

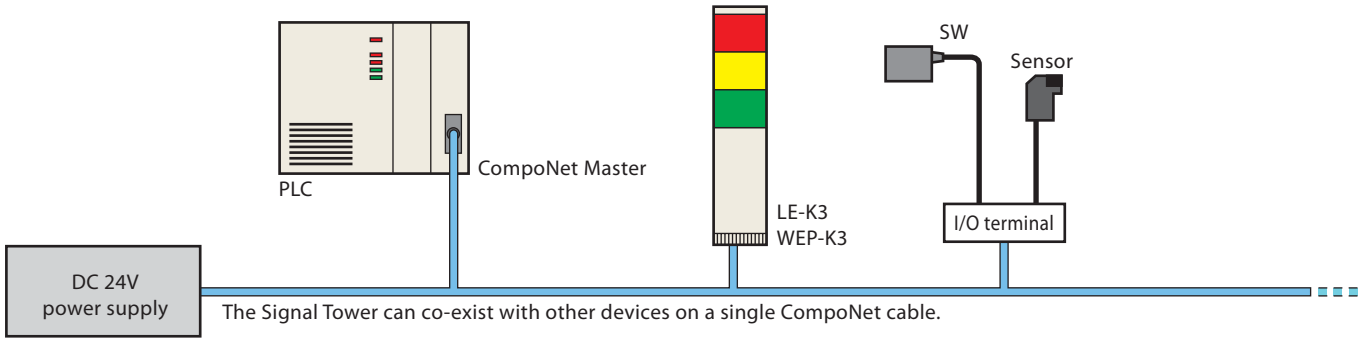

Dimensions

LE-K3

Direct mount

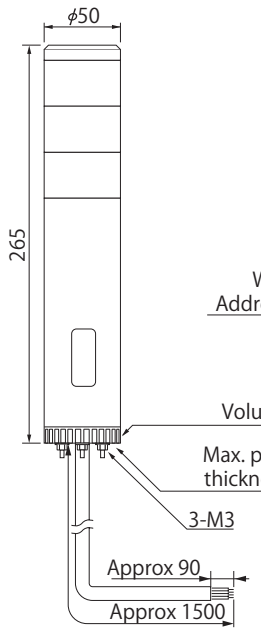

Pole mount

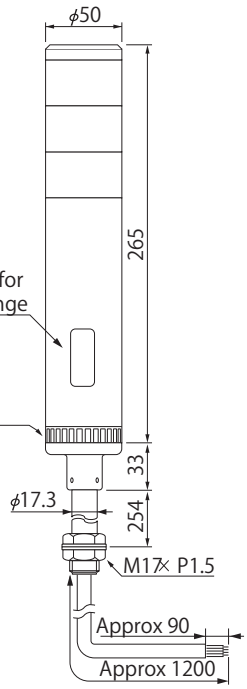

WEP-K3

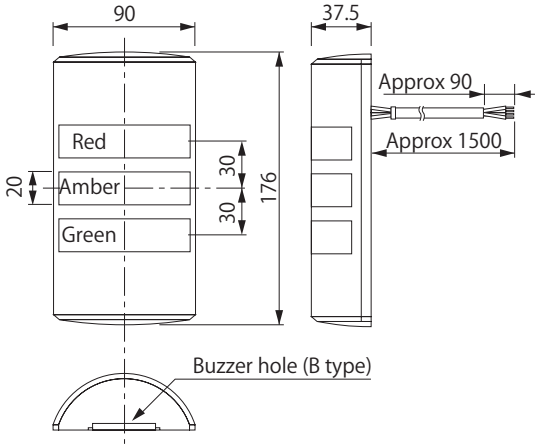

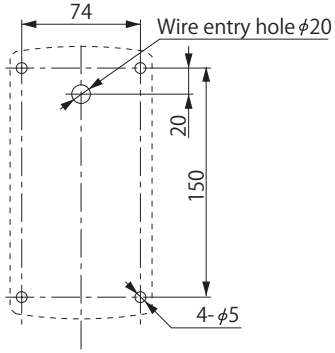

Mounting Dimension

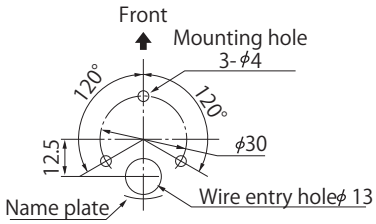

Side-Mount Bracket

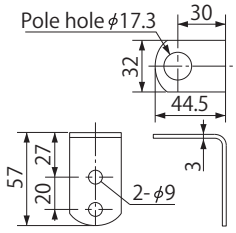

(Unit: mm)

Wire Color	Signal
BROWN	BS+ (24VDC)
BLACK	BS- (0V)
WHITE	BDH (H) Line
BLUE	BDL (L) Line

Specifications

Series	Stack Number	Model	Audible Alarm Option	Signal Line	Power Line	Current Consumption			
						CompoNet PCB (Max)	LED Unit (Max)		Audible Alarm
LE	3 Tiers	LE-K3W/LE-K3P	N/A	BDH BDL	BS+ (24VDC) BS- (0V)	60mA	25mA (Red, Amber)	20mA (Green)	N/A
		LE-K3BW/LE-K3BP	Available						40mA
WEP		WEP-K3	N/A				30mA (Red, Amber)	25mA (Green)	N/A
		WEP-K3B	Available						40mA

LHE-C3/LE-C3/WEP-C3

CC-Link Supported

CC-Link

LED

2 Alarm Sounds (LHE/LE)

90db at 1m

1 Alarm Sound (WEP)

85db at 1m

IP23

Network

CC-Link supported Signal Tower for Open-field Network

FEATURES

- Single cable uses CompoNet cable only, which transfers power and signals for control.
- Easy connection directly to 64 linkable CompoNet units with DeviceNet cable, without I/O terminals.
- Requires a CompoNet controller (i.e. CompoNet Master).
- Address Data Storage setting with the internal DIP switch.
- Light Pattern is continuous only, no flashing available.
- Built-in alarm for B-type models such as; LHE: 90dB at 1m (adjustable), LE: 85dB at 1m (adjustable), WEP: 90dB at 1m.
- Sound Patterns available are; LHE / LE: Intermittent tone, Alarm 1: short beep, Alarm 2: long beep. WEP: 1 alarm, continuous tone only.
- Models include interchangeable modules*, no re-wiring necessary, even after installation (except for WEP type).

*Refer to the standard models for details.

LHE-C3
LHE-C3B

- Original LED reflection system to improve brightness and provide maintenance-free operation.
- Direct mount installation is standard; pole-mount is available with the optional mounting pole.
- Lens is made of superior impact and heat resistant AS resin for superior durability and light transmission.

DIRECT MOUNT

LE-C3W
LE-C3BW

POLE MOUNT

LE-C3P
LE-C3BP

- PATLITE's exclusive Prism-Cut Lens designed for enhanced visibility from any direction and distance.
- Original Dual Reflection System for enhanced light diffusion; creating bright, distinctive illumination while saving energy.
- Direct or pole mount installation.
- Main body is constructed of ABS resin with superior resistance to impact and heat.
- Lens is made of superior impact resistant and light translucent AS resin.

WEP-C3
WEP-C3B

- Clear vertical-cut lens for enhanced illumination over a wide perspective.
- Installation can be vertical and horizontal (Alarm type must have buzzer installed face-down).
- Lens made of superior impact and heat resistant polycarbonate resin for superior durability and enhanced illumination.

Application Example

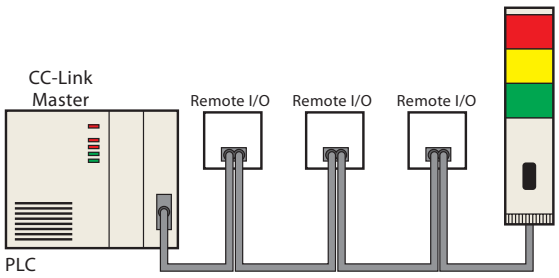

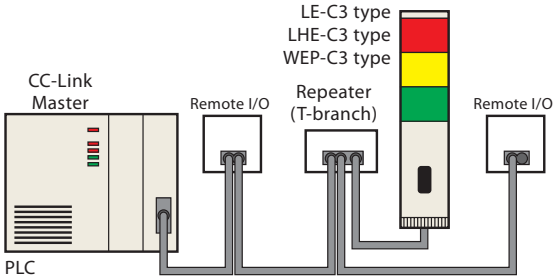

CC-Link Signal Towers without Terminal Resistors can be branched via terminal blocks when Repeaters are not used.

Dimensions

LHE-C3
LHE-CT3

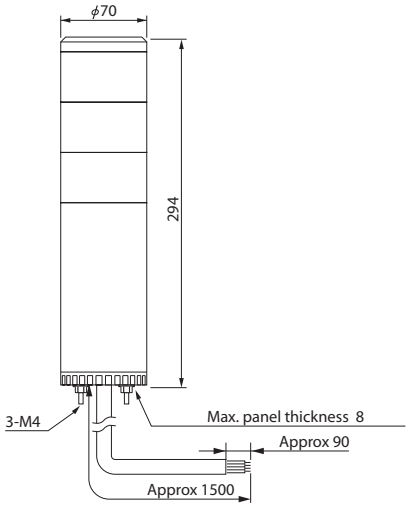

LE-C3
LE-CT3

Direct mount

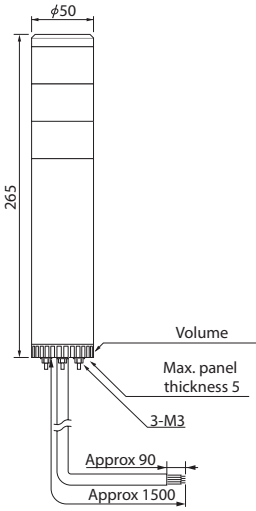

Pole mount

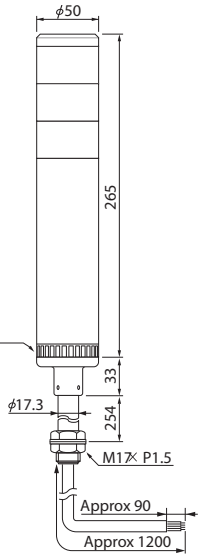

WEP-C3
WEP-CT3

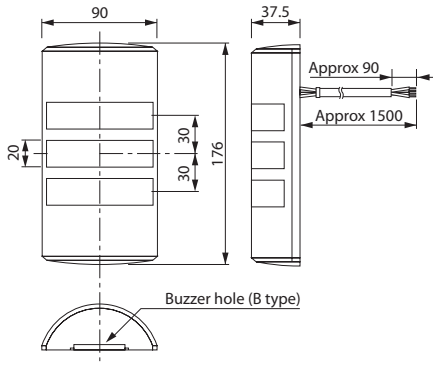

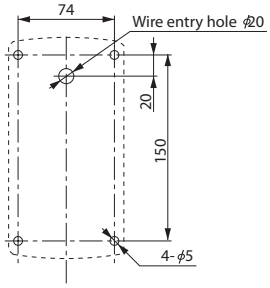

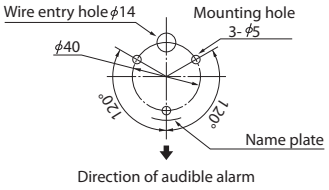

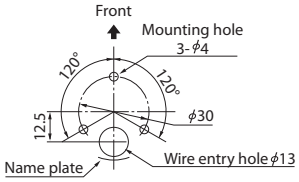

Side-Mount Bracket

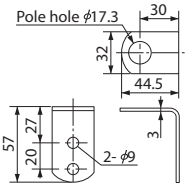

(Unit: mm)

C3: Without Terminal Resistor
CT3: With Terminal Resistor

Wire Color	Signal
BLUE	DA
WHITE	DB
YELLOW	DG
(NONE)	SLD

Specifications

Series	Stack Number	Model	Audible Alarm Option	Signal Line	Current Consumption			
					CC-Link PCB (Max)	LED Unit (Max)		Audible Alarm
LHE	3 Tiers	LHE-C(T)3	N/A	DA, B, DG, SDL	50mA	50mA (Red, Amber)	40mA (Green)	N/A
		LHE-C(T)3B	Available					40mA
LE		LE-C(T)3W/LE-C(T)3P	N/A			50mA (Red, Amber)	40mA (Green)	N/A
		LE-C(T)3BW/LE-C(T)3BP	Available					40mA
WEP		WEP-C(T)3	N/A			30mA (Red, Amber)	25mA (Green)	N/A
		WEP-C(T)3B	Available					40mA

PHE-3FBE1

RS-232C / PC Controlled Signal Tower

RoHS

LED

2 Alarm Sounds

85dB at 1m

Φ40

Network

• This product requres the knowledge to program with ASCII commands to output through an RS-232C port.

Signal Tower can be controlled directly by PC through RS-232C.

FEATURES

- Alarm is adjustable up to 85dB at 1m
- High-volume alarms (two patterns) can be heard even in a noisy factory.
- Bright LED signal tower
- PATLITE's original double reflection system with its exclusive hybrid prism-cut lens and 3 color LED modules create distinctive illumination that is bright and even.
- Light and alarm functions can be turned off by pressing the reset switch on the base.

Dimensions

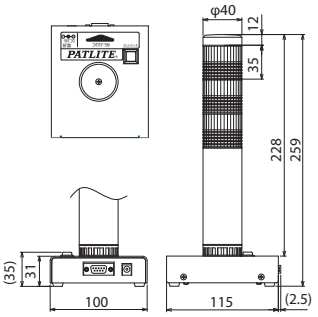

(Unit: mm)

Specifications

Model		PHE-3FBE1
Communication Protocol	Interface	RS-232C (Based on EIA)
	Method	Half-duplex, Full-duplex, Asynchronous
	Baud Rate	9,600 bps
	Data Bit	8 bit
	Stop Bit	1 bit
	Parity Bit	None
	Flow Control	None
	I/O Port	D-sub 9 pin Male Connector
Signal Tower Specifications	Flashing Rate	60 flashes per minute
	Sound Level	Adjustable from 70dB to 85dB (at 1m)
	Tone Pattern	2 Alarms (Slow Intermittent, Fast Intermittent)
PHE Base Specifications	Dimensions (mm)	100(W) x 259(H) x 115(D)
	Power Supply Source	AC Adaptor (Sold Separately)
	Power Consumption	6.5W
	Operating Temperature Range	0°C to +40°C
	Humidity	20 to 80% RH (No Condensation)

PHE-3FBE1 / PHC-100A Control

■ASCII Command String

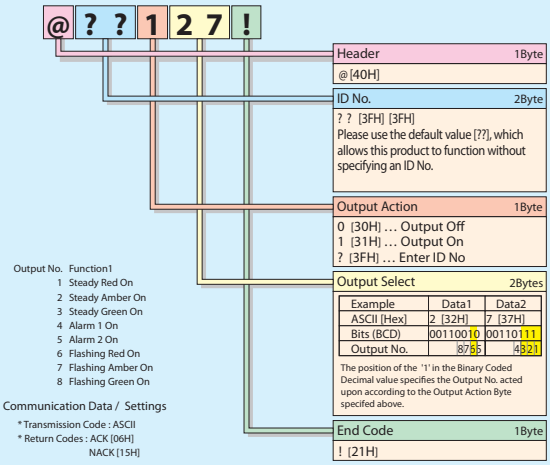

● The above example shows how to turn on the following output numbers : 6, 3, 2, 1

PHC-100A

Interface Converter

Network

Terminal

- This product requres the knowledge to program with ASCII commands to output through an RS-232C port.

The PHC-100A Interface Converter can be connected to the RS-232C port on your programmed PC to control most PATLITE products, both visual and audible.

- 16 terminals provide 8 isolated non-voltage contact outputs.
- Reset pushbutton provided to reset all outputs to the off state.

Dimensions

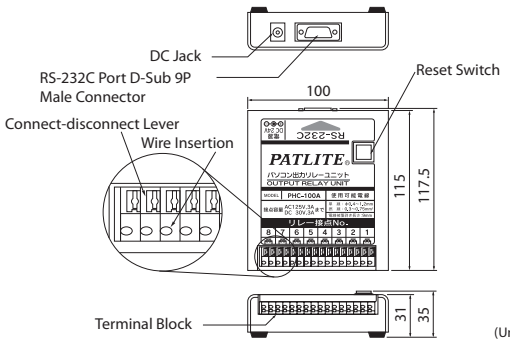

(Unit: mm)

●Basic Connections

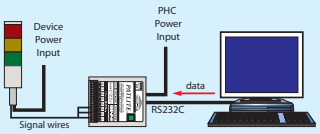

●Application Examples

Transfer data to turn on relay circuit 1 from PC.

Data **@??101!**

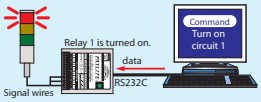

Transfer data to turn on relay circuit 2 from PC.

Data **@??102!**

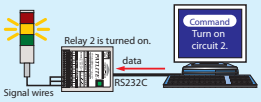

Transfer data to turn on relay circuits 2 and 3 from PC.

Data **@??106!**

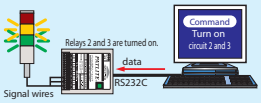

Specifications

Model		PHC-100A
Communication Protocol	Interface	RS-232C (Based on EIA)
	Method	Half-duplex, Full-duplex, Asynchronous
	Baud Rate	9,600 bps
	Data Bit	8 bit
	Stop Bit	1 bit
	Parity Bit	None
	Flow Control	None
	I/O Port	D-sub 9 pin Male Connector
PHC Base Terminal Buss Specifications	Contact Type	Non-voltage Contact
	Contact Outputs	8
	Output Load Capacity	AC 125V 3A / DC 30V 3A
	Connector	Screwless Terminal
	Applicable Wire Size	Solid Wire: AWG18 - 26 (0.4 - 1.2mm^2) Stranded Wire: AWG20 - 22 (0.3 - 0.75mm^2)
PHE Base Specifications	Dimensions (mm)	100(W) x 31(H) x 115(D)
	Power Supply Source	AC Adaptor (Sold Separately)
	Power Consumption	4.0W
	Operating Temperature Range	0°C to +40°C
	Humidity	20 to 80% RH (No Condensation)

PHU-3

USB / PC Controlled Signal Tower

RoHS

LED

Φ25

IP20

Network

Signal Tower can be controlled directly by PC through the USB Port.

FEATURES

- Bright LED available as RYG or RYB three-tiered Signal Tower.
- PATLITE's original double reflection system with its exclusive hybrid prism-cut lens and 3 color LED modules create distinctive illumination that is bright and even.
- Power source supplied by USB Buss Power.

How to Order

PHU-3-RYG

Tiers
3: 3 Tiers

Color
RYG: (Red, Amber, Green)
RYB: (Red, Amber, Blue)
(Top to bottom)

Specifications

Model		PHU-3-RYG	PHU-3-RYB
General	Rated Voltage	5V DC (USB Buss Power)	
	Operating Voltage Range	DC 4.4V to DC 5.25V	
	Rated Current Consumption (Power Source)	Standby Mode: 25mA Operating Mode: 230mA Max.	
	Operating Temperature Range	-10°C to +55°C	
	Relative Ambient Temperature	RH 90% or less (No Condensation)	
	Electric Noise Intensity Level	VCCI Class-B Equivalent	
Signal Tower	Installation	Upright Position Only	
	Protection Rating	IP20	
	Insulation Resistance	More than 1MΩ at DC500V between the terminals and Chassis	
	Withstand Voltage	AC 500V applied for 1 minute between the terminals and chassis without breaking insulation.	
	Mass	0.18kg	
Interface	Input / Output	Input: USB / Output: LIghting (Red, Amber, Green, Blue LED)	
	Physical Specifications	Connector Input: Series-B Receptacle (USB Rev. 1.1 Compliant)	

Dimensions

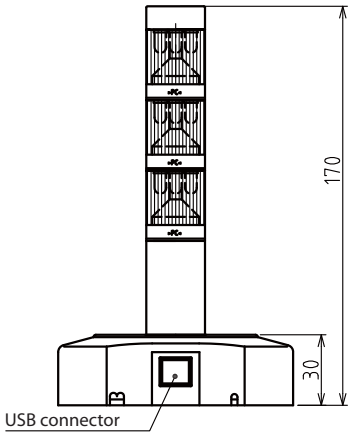

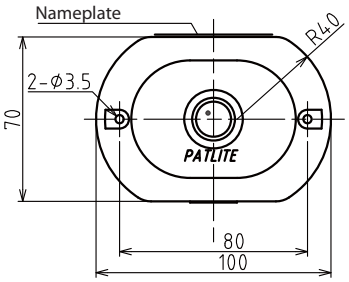

(Unit: mm)

Example) PHU-3-RYG controlling Red and Green LED lights (*1)

Logic Specifications	Action	Bit Data
	"Red" Light On	0000 0001
	"Amber" Light On	0000 0010
	"Green" Light On	0000 0100
	"Blue" Light On	0000 1000
	"Red", "Amber" Light On; "Green", "Blue" Light Off	0000 0011
	"Red", "Green" Light On; "Amber" , "Blue" Light Off	0000 0101
	"Amber", "Green" Light On; "Red", "Blue" Light Off	0000 0110
	"Amber", "Blue" Light On; "Red", "Green" Light Off	0000 1010
	"Red", "Amber", "Green", "Blue" Light On	0000 1111
	"Red", "Amber", "Green", "Blue" Light Off	0000 0000

Transfer Mode	Bulk Transfer
Data Error Detection Criteria	CRC (Cyclic Redundancy Check)
Packet Commands	Token Packet (SOF, SETUP, OUT, IN)
	Data Packet
	Handshake Packet

Transmission Setting (Virtual COM)		
Bit Rate	:	19,200bps
Data Length	:	8 bits
Parity	:	None
Stop Bit	:	1 bit
Control Flow	:	None

HEX	0				5			
Binary	0	0	0	0	0	1	0	1

Not Used

Blue LED 0: Off /1: On
Green LED 0: Off /1: On
Amber LED 0: Off /1: On
Red LED 0: Off /1: On

*2 *3

*1 Drivers for Windows OS may have to be installed prior to use. Refer to the Instruction Manual on how to get the latest downloads.

*2 This product does not include a Flashing function but it can be controlled by programming it through the USB output.

*3 The control commands for the Green LED and Blue LED for the PHU-3-RYG and PHU-3-RYB are controlled seperately.

- This Unit is designed to be controlled by one computer, improper operation may occur with two or more units connected.

VE25/VE100

Real-time Production Monitoring Solution

RoHS

LED

Terminal

25mm/100mm

Network

VE25-304SU
3 Row, 4 Digit Type
Digit Size : 25mm

VE100-304SU
3 Row, 4 Digit Type
Digit Size : 100mm

VE-IRU
Infrared Remote Control Unit
(Sold Separately)

* Compliant with FCC Title 47 Part 15 Subpart B

- Improve Manufacturing Productivity
- Reduce Down Time for "Kaizen"
- Ideal for Lean Manufacturing
- Real-time Production Monitoring
- Large Digital Displays
- Easy Installation

Our VE Series Real-time Production Monitoring Solution serves as a rugged, factory floor Andon system, with real-time production status indication to alert product performance to workers and supervisors. The VE Series Real-time Production Monitoring Solution is easy to install directly on operator workstations or automated machinery, and the wireless remote control unit enables easy setup. The VE Series Real-time Production Monitoring Solution comes in 2 models (25mm or 100mm character height), and it fully supports the principles of "Kaizen" (continuous improvement) to achieve a "Visual Factory", where clear and easy to understand information is quickly accessible.

FEATURES

- Available in 25mm and 100mm digit sizes.
- Production-control settings can easily be set-up with the remote control or PC (Sold Seperately).
- Bright LED digits for easy viewing.
- External terminal output for adding an extra 3 color LED Signal Tower to add distinctive signaling.

- Easy Setup

Plan

Prescale

Takt-time

- Three-terminal Output

Progress Loss
Red Light
Progress Gain
Amber Light Flash
Goal
Green Light Flash

- Optional Bracket for VE-100 Available

VE-100 Brackets
(Set of 2, Sold Separately)

Serial Network Application

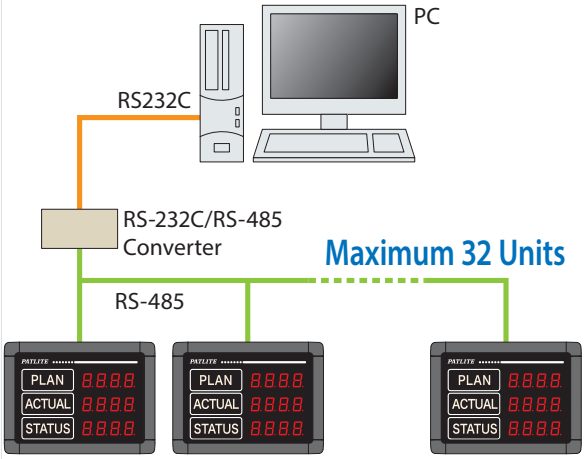

Stand-alone Application

Output Devices

- Beacons
- Audible Alarms
- Annunciators

Input Devices

- Manual Switches
- Micro Switches
- Relays
- RS485 Converters

Dimensions

Model VE25-304SU

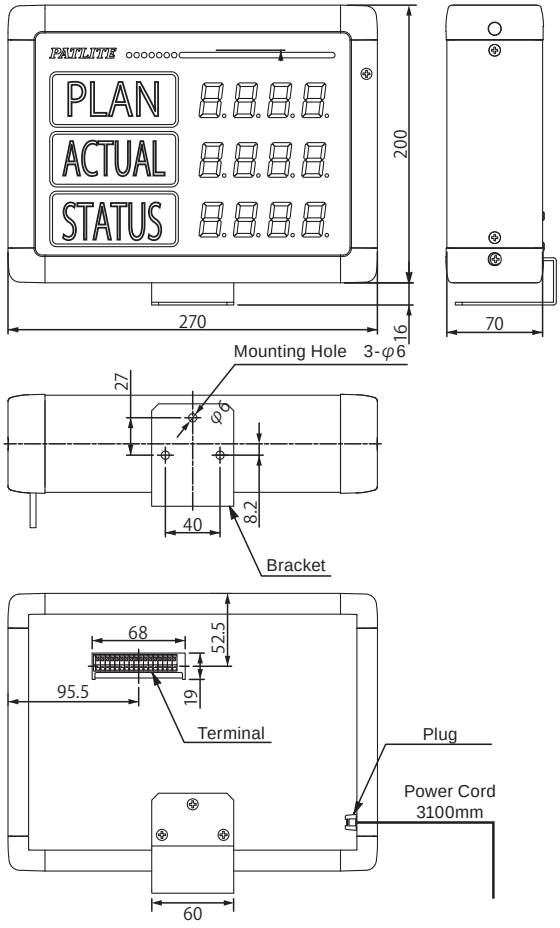

Model VE100-304SU

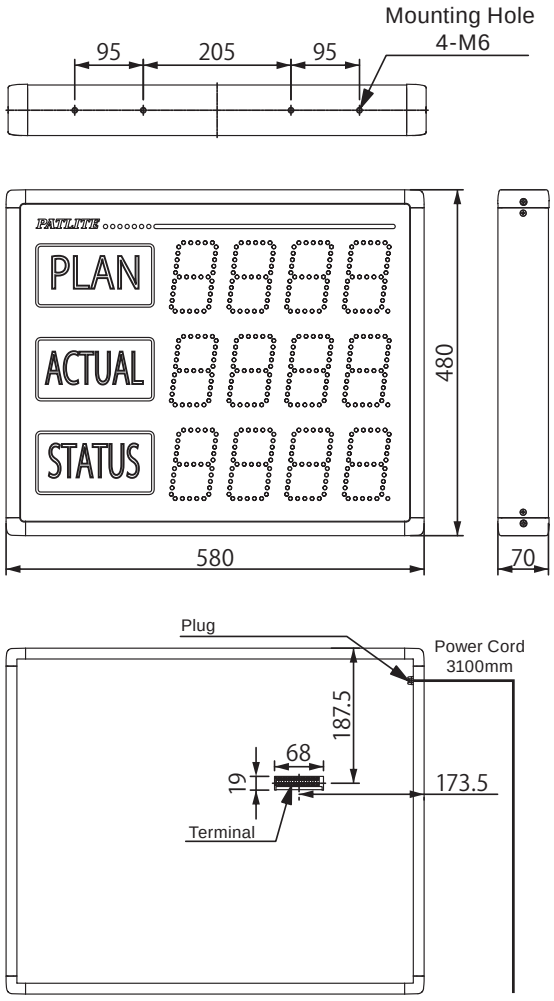

(Unit: mm)

MEMO

Explosion-Safe Products

EDLM / EDWM

Explosion-Safe Signal Tower

ATEX & FM
CENELEC Standards

Testing Authority
NEC Article 505

LED

IP66

Explosion-Safe

NPN/PNP Open-collector

EDWM

EDLM

Wall Mount

Horizontal Mount

Direct Mount

FEATURES

- Complies with with CE according to ATEX and NEC 505 standards.
- Mounting can be done in the Upright, Wall-mount, and Horizontal position
- Voltages available in AC/DC24V, AC120V, AC230V, and free voltage of AC90 -250V
- Easy wire connection terminals to the Signal Tower by opening the bottom
- Different lens colors available for customized designs
- Available in 3 Tier or 5 Tier Stacks
- Ingress protection of IP66

Innovative maintenance-free Explosion-safe LED Signal Towers with pressure and flame-proof housing, ideal for potentially flammable and hazardously explosive environments.

■ CENELEC (ATEX Directive)					
Type	EDLM-302FE	EDLM-312FE	EDLM-323FE	EDWM-502FE	EDWM-5M2FE
Rated Voltage	AC/DC24V	AC 120V	AC 230V	AC/DC 24V	AC 90V - 250V
Signal Line Current (Per LED)	Red/Amber: 52.5mA Green: 20.0mA			Red: 22.6mA Amber: 26.6mA Green: 17.5mA Blue/White: 38.9mA	
Explosion Protection Ratings	Ex II2G Ex d IIC T6 (Zone 1,2)			Ex II2D EX tD A21 IP66 T80°C (Zone 21, 22)	
Operating Temperature Range	-20°C - +50°C (no ice)				
Operating Humidity Range	45% - 85% RH (No dew or condensation)				
Ambient Pressure Range	80 - 110kpa				
Lighting Pattern	Flashing (60 ±12 flashes per minute) / Continuous Lighting				
Protection rating	IP66				
Vibration Reistance	9.8m/s^2				
Mounting	Outdoor & Indoor: Upright			Outdoor & Indoor: Upright and Sideways	
Luminosity	Red: 350mcd Amber: 580mcd Green: 1300mcd			Red/ Amber/ Green: 1000mcd Blue/White: 300mcd	
Mass (Main Body)	4.3kg			4.7kg	
Material	Upper/Lower Housing: Aluminum Alloy (Melamine Baked Finish) Glass Case: Borosilicate Glass Fitting Bracket: Stainless Steel (SUS316) Cable Gland: Brass				

■ CENELEC (ATEX Directive)					
Type	EDLM-302FA	EDLM-312FA	EDLM-323FA	EDWM-502FA	EDWM-5M2FA
Rated Voltage	AC/DC24V	AC 120V	AC 230V	AC/DC 24V	AC 90V - 250V
Signal Line Current (Per LED)	Red/Amber: 52.5mA Green: 20.0mA			Red: 22.6mA Amber: 26.6mA Green: 17.5mA Blue/White: 38.9mA	
Explosion Protection Ratings	Ex II2G Ex d IIC T6 (Zone 1,2)			Ex II2D EX tD A21 IP66 T80°C (Zone 21, 22)	
Operating Temperature Range	-20°C - +50°C (no ice)				
Operating Humidity Range	45% - 85% RH (No dew or condensation)				
Ambient Pressure Range	80 - 110kpa				
Lighting Pattern	Flashing (60 ±12 flashes per minute) / Continuous Lighting				
Protection rating	IP66				
Vibration Reistance	9.8m/s^2				
Mounting	Outdoor & Indoor: Upright			Outdoor & Indoor: Upright and Sideways	
Luminosity	Red: 350mcd Amber: 580mcd Green: 1300mcd			Red/ Amber/ Green: 1000mcd Blue/White: 300mcd	
Mass (Main Body)	4.3kg			4.7kg	
Material	Upper/Lower Housing: Aluminum Alloy (Melamine Baked Finish) Glass Case: Borosilicate Glass Fitting Bracket: Stainless Steel (SUS316) Cable Gland: Brass				

EDLM & EDWM are covered by the specifications shown in the **shaded** areas below:

Common Standards for Europe

- The ATEX directive is a CENELEC Standard

Classification	Standard	PATLITE Models	Constant Exposure	Occasional Exposure	Rare & Temporary
ATEX, IEC/EU Directive 94/9/EC	IEC 60079-10 EN 60079-10	EDLM, EDWM	Zone 0	Zone 1	Zone 2

Common Standards for the USA

- NEC is a National Electrical Code Standard for North America

Classification	Standard	PATLITE Models	Constant Exposure	Occasional Exposure	Rare & Temporary
NEC Article 505	ANSI/NFPA 71	EDLM, EDWM	Zone 0	Zone 1	Zone 2
NEC Article 500	ANSI/NFPA 70	—	Division 1		Division 2

Dimensions

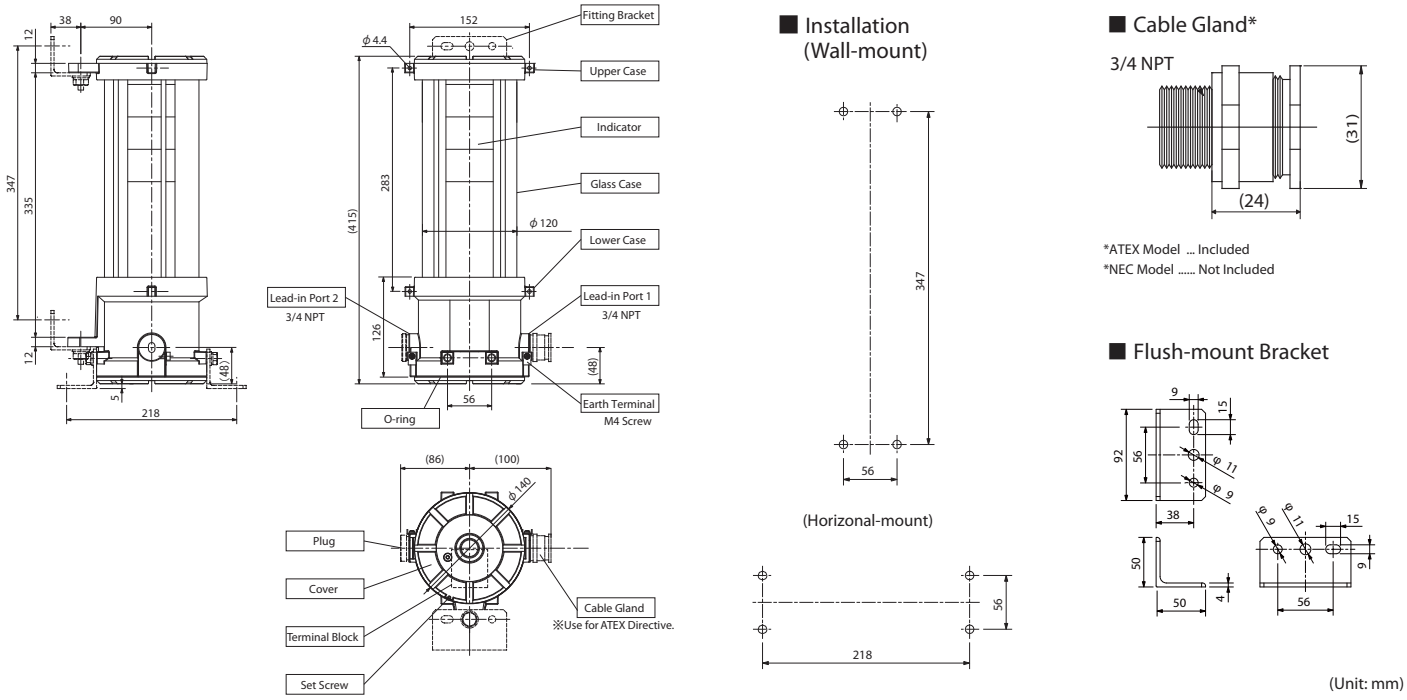

(Unit: mm)

Wiring

EDLM (3 Color LED)

- **EDLM-302FE/ EDLM-302FA**

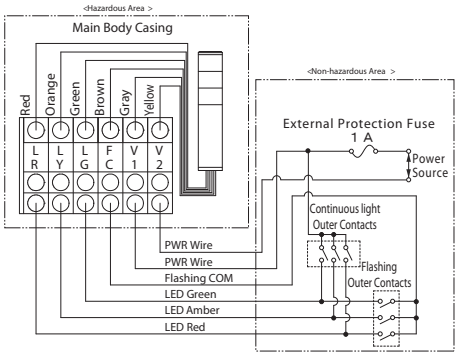

- **EDLM-312FE/ EDLM-312FA**
  EDLM-323FE/ EDLM-323FA

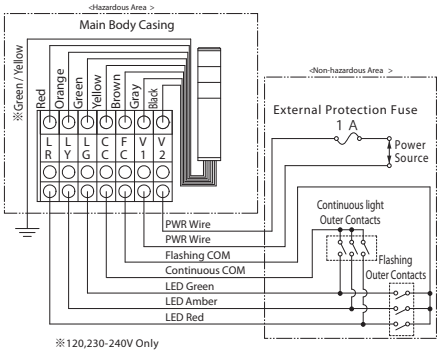

※120,230-240V Only

EDWM (5 Color LED)

- **EDWM-502FE/ EDWM-502FA**

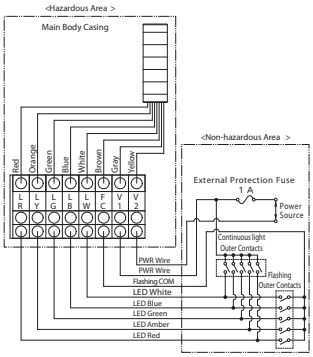

- **EDWM-5M2FE/ EDWM-5M2FA**

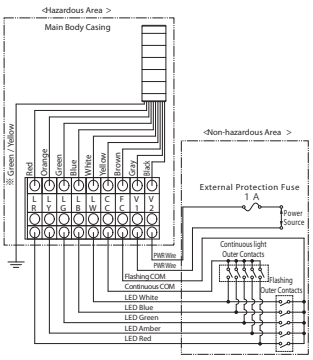

External Protection Fuse (All Models): 250V 1A

AR-070

CE Ex II 3GD Ex nA IIC T4 Gc, Ex tc IIIC T85°C Dc IP65 94/9/EC (ATEX) CENELEC: EN 60079-0, EN 60079-15, EN 60079-31

Explosion-Safe Signal Tower

RoHS CE Ex

1/2" NPT
*1/2 NPT Adaptor also available

Side-mount Bracket

LED

85db at 1m

IP65 (IP54 with Buzzer)

Explosion-Safe

Φ40

FEATURES

- Explosion-Safe for gas and dust
- Suitable for Zone 2 and Zone 22
- CE Compliance in accordance to ATEX
- Full and brilliant lumination
- LED double reflection lighting system
- Different lens colors available
- Stackable from 1 to 5 tiers
- Wall mount or direct mount
- Ingress protection of IP65 (IP54 with buzzer)
- Available with "flashing/ non-flashing" and two audible alarm sounds

Explosion-Safe Signal Tower
φ40mm with sealed cable

Dimensions

SIGNAL LIGHT

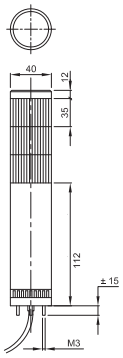

SIDE MOUNT BRACKET

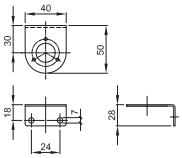

TEMPLATE

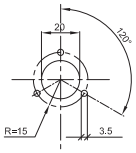

1/2" NPT ADAPTER TYPE

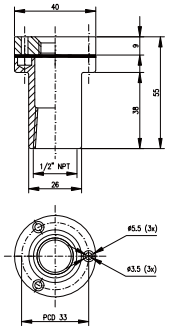

Units: mm

Specifications

Explosion-safety	CE Ex II3 GD; Ex nA IIC T4 Gc: Ex tc IIIC T85°C Dc IP65
CE Conformities	EN 60079-0, EN 60079-15, EN 60079-31
Certification	EC Declaration of Conformity
Ambient Temperature	-30°C - +60°C
Ingress Protection	IP65 to EN 60529
Material	ABS Tower Body
Lighting Source	Multiple LED's with Double Reflection System
Acoustical Source	Buzzer with two different tones: 85dB (at 1m)
Rated Voltage	AC/DC 24V
Assembly Position	As Desired
Activation Time	100%
Module Colors Available	Red, Amber, Green, Blue, Clear/White
Cable	Factory sealed cable, φ8mm, length 3 meters

CURRENT RATINGS			
LED		BUZZER	
Signal Line Current		Signal Line Current	Inrush Current
Red, Amber	Green, Blue, Clear		
ab. 30mA	ab. 25mA	ab. 40mA	ab. 250mA

Wiring

Lighting AC/DC 24V

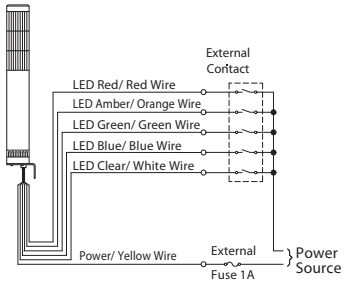

Lighting/Flashing/Alarm AC/DC 24V

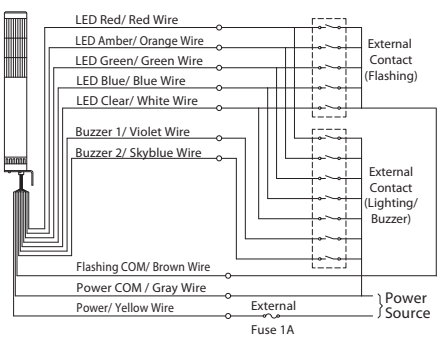

How to Order

AR-070-0 □ 1 / □ □ -RYGBC

Model Code
1 : Continuous Light
2 : Flashing/ Alarm

Rated Voltage
1: AC/DC 24V

Tiers
1: 1 Tier
2: 2 Tiers
3: 3 Tiers
4: 4 Tiers
5: 5 Tiers

Bracket Code
Blank : L Type
N : NPT Type

LED Color
R: Red
Y: Amber
G: Green
B: Blue
C: Clear/White
(From top to bottom)

※ AC type available by special order.

AR-078

CE Ex II 3GD Ex nA IIC T4 Gc, Ex tc IIIC T85°C Dc IP65 94/9/EC (ATEX) CENELEC: EN 60079-0, EN 60079-15, EN 60079-31

Explosion-safe Signal Tower

Side-mount Bracket

3/4" NPT
*3/4 NPT Adaptor also available

FEATURES

- Explosion-Safe for gas and dust
- Suitable for Zone 2 and Zone 22
- CE Compliance in accordance to ATEX
- Full and brilliant lumination
- LED double reflection lighting system
- Different lens colors available
- Stackable from 1 to 5 tiers
- Wall mount or direct mount
- Ingress protection of IP65 (IP54 with buzzer)
- Available with "flashing/ non-flashing" and two audible alarm sounds

LED

90db at 1m

IP65 (IP54 with Buzzer)

Explosion-Safe

Φ60

Explosion-Safe Signal Tower

φ60mm with sealed cable

Dimensions

SIGNAL LIGHT

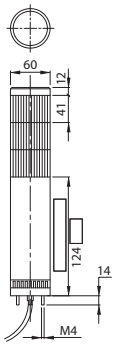

SIDE MOUNT BRACKET

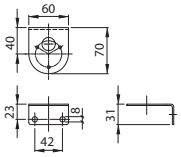

TEMPLATE

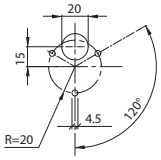

3/4" NPT ADAPTER TYPE

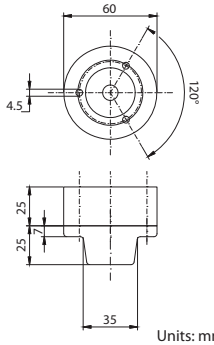

Units: mm

Specifications

Explosion-safety	CE Ex II3 GD; Ex nA IIC T4 Gc: Ex tc IIIC T85°C Dc IP65
CE Conformities	EN 60079-0, EN 60079-15, EN 60079-31
Certification	EC Declaration of Conformity
Ambient Temperature	-30°C - +60°C
Ingress Protection	IP65 to EN 60529
Material	ABS Tower Body
Lighting Source	Multiple LED's with Double Reflection System
Acoustical Source	Buzzer with two different tones: 90dB (at 1m)
Rated Voltage	AC/DC 24V
Assembly Position	As Desired
Activation Time	100%
Module Colors Available	Red, Amber, Green, Blue, Clear/White
Cable	Factory sealed cable, φ8mm, lenght 3 meters

CURRENT RATINGS			
LED		BUZZER	
Signal Line Current		Signal Line Current	Inrush Current
Red, Amber	Green, Blue, Clear		
ab. 30mA	ab. 25mA	ab. 40mA	ab. 250mA

Wiring

Lighting AC/DC 24V

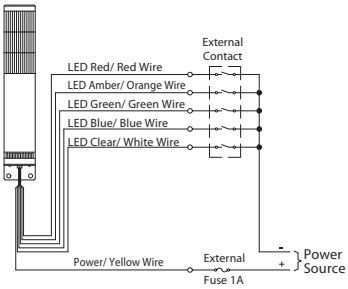

Lighting/Flashing/Alarm AC/DC 24V

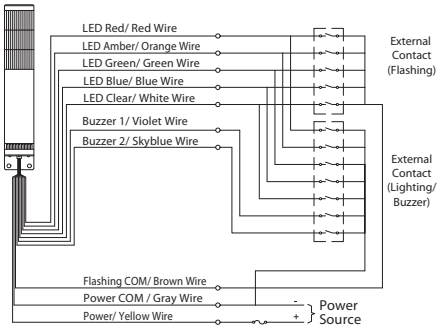

How to Order

AR-078-0 ☐ 1 / ☐ ☐ -RYGBC

Model Code
1 : Continuous Light
2 : Flashing/ Alarm

Voltage Code
1: AC/DC 24V

Tier Code
1: 1 Tier
2: 2 Tiers
3: 3 Tiers
4: 4 Tiers
5: 5 Tiers

LED Color Code
R: Red
Y: Amber
G: Green
B: Blue
C: Clear/White
(From top to bottom)

Bracket Code
Blank : L Type
N : NPT Type

※ AC type available by special order.

LKEH-EX

CE Ex II 3GD Ex nA IIC T4 Gc, Ex tc IIIB T85°C Dc IP54 94/9/EC (ATEX) CENELEC: EN 60079-0, EN 60079-15, EN 60079-31

Explosion-Safe LED Hybrid Signal Tower

LED

32 Channels (Binary)

63 Seconds

105 db at 1m

Explosion-Safe

FEATURES

- Explosion-Safe for gas and dust
- Suitable for Zone 2 and Zone 22
- CE Compliance in accordance to ATEX
- LED brightness is visible from a far distance with a big 100mm diameter module
- Super-bright LED colors corresponding to different voice, alarm, chimes and melody sounds.
- Voice alert messages of up to 63 seconds (64kbit/sec) with 5 channels for playback.
- 32 different melody, chime sound combinations are pre-recorded
- 8 sounds can be played back with bit input, or 32 sounds with binary input
- Stackable from 1 to 4 tiers
- Adjustable volume from 0 to 105dB (at 1m)
- MP3 model is field-programmable, using an SD Card for model LKEH-FV-EX
- Robust design able to withstand vibrations of up to 2G.
- Body is made of Acrylonitrite-Ethylene-Styrene for weather resistance
- One common wire can easily control both LED Units and audible signals
- NPN open-collector connection is standard, PNP is available upon request

LKEH-FV-EX, LKEH-FE-EX

Dimensions

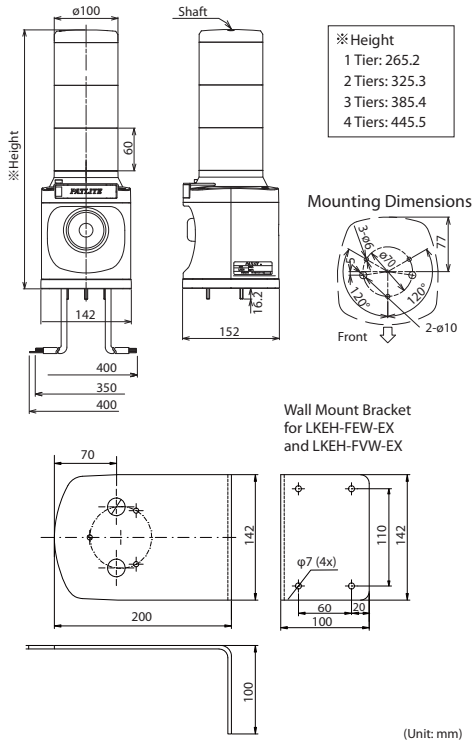

How to Order

LKEH-302FVF-RYG-EX

- Model
- Tiers: 1~4
- Type: FV: Voice Synthesizer; FE: 32 Sounds
- Mounting: F: Flush-mount; W: Wall-mount
- Color: R: Red; Y: Amber; G: Green; B: Blue; C: Clear/White (Top to Bottom)

Model	MP3	Power
LKEH-FEF-EX/LKEH-FEW-EX	—	14.2W
LKEH-FVF-EX/LKEH-FVW-EX	Supports	14.2W

SD Card (SDV-128) for models LKEH-FVF-EX and LKEH-FVW-EX is sold separately.

Sound Selection Chart

Beep (slow intermittent)	Stutter + Bell	Inverted Reveille	Annie Laurie
Stutter (rapid intermittent)	Melody Chime	Galactic Motor	London Bridge is falling down
Bell (clear high-pitch)	Chime	Ringing Phone	Mary had a little Lamb
Yelp (rapid siren)	Call Sign	Two Tone	Camptown Races
Rapid Hi-Lo	Train Ride	Alarm Clock	Amaryllis
Melody Chime	Galloping Hi-Lo	Ringing Hi-Lo	Mozart Symphony No. 40
Synthesized Piano	Alien Chatter	Fur Elise	Ave Maria
Synthesized Bell	Falling Crystals	Bach Minuet in Gmaj	Grandfather's Clock

Specifications

Model	Rated Voltage	MP3, Melody	Operating Temperature Range	Recordable Duration	Mounting Brackets	Channels	Mass
LKEH-FEF-EX	DC 24V	Type-E	-10°C to +50°C 85% RH or less	Pre-recorded	Flush-mount	8ch bit input, 32ch binary input	2.8kg
LKEH-FEW-EX		Type-E			Wall-mount	8ch bit input, 32ch binary input	3.2kg
LKEH-FVF-EX		MPEG1-Audio Layer III, 64kbit/s		63 seconds	Flush-mount	5ch bit input, 32ch binary input	2.8kg
LKEH-FVW-EX		MPEG1-Audio Layer III, 64kbit/s			Wall-mount	5ch bit input, 32ch binary input	3.2kg

- The mass is based on a 3-tiered LED Model LKEH. The mass will change in accordance to the number of tiers.

EHS-EX/EHV-EX

CE Ex II 3GD Ex nA IIC T4 Gc, Ex tc IIIC T85°C Dc IP65 94/9/EC (ATEX) CENELEC: EN 60079-0, EN 60079-15, EN 60079-31

Explosion-Safe Melody/Alarm Horn

RoHS

EHV 63 Channels (Binary)

110 dB at 1m (EHS)

IP65

Explosion-Safe

FEATURES

- Protection Rating of IP65.
- Explosion-Safe for gas and dust
- Suitable for Zone 2 and Zone 22
- CE Compliance in accordance to ATEX
- EHS-EX comes with 32 preloaded melody and alarm sounds with adjustable volume up to 110dB (@ 1m).
- Robust, indoor and outdoor use with vibration resistance up to 4.5G.
- EHV-EX comes with 63 preloaded crisp and clear melody and alarm sounds with adjustable volume up to 110dB (@ 1m).
- EHV-EX offers a field-programmable MP3 function with a maximum of 220 sec. of recording time (@ 64bps) and an adjustable volume up to 105dB (@ 1m).
- Ideal for plant-wide notification, public address and process control.
- UL464, CSA-C22.2 NO.205-M1983, FCC Part 15 Subpart B Class 4.
- CE, RoHS Compliant (EHS-M1 and EHV-M1 Only).

Dimensions

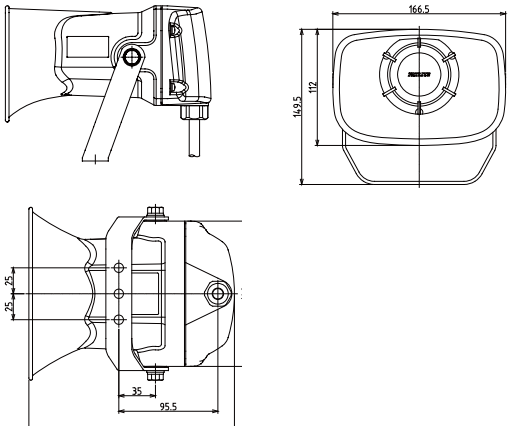

Wiring

- Non-voltage (NPN) Wiring

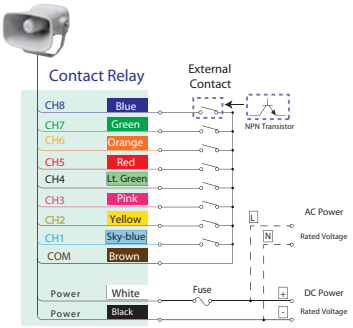

- PNP Wiring

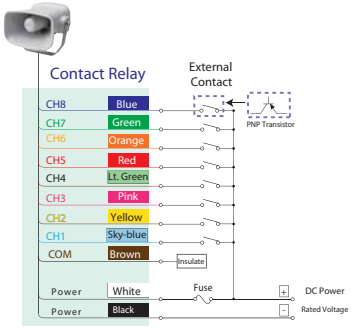

- Terminal (NPN)

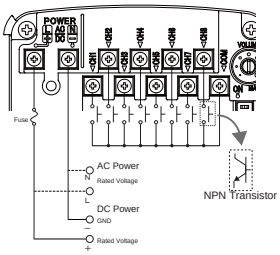

- Terminal (PNP)

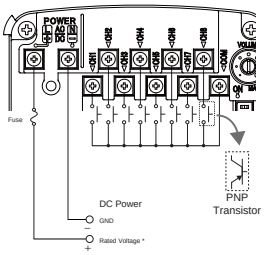

How to Order

EH□- M1□□- EX

Model
V: MP3 Alert Horn
S: Melody/Alarm Horn

Melody/Alarm Type
E: Type E (EHS)
G: Type G (EHV)

Wiring Type
H: Cable
T : Terminal

Specifications

Model	Rated Voltage	Voltage Range	Power Consumption	Rated Current Consumption	Sound Pressure (max)	Operating Temperature Range	No. of Playback Messages	Protection Rating	Wiring Type	Mass
EHS- M1H	DC 12 - 24V	DC 10.8V to 26.4V	4W (at DC24V)	450mA (max)	Alarm: 110dB (at 1m)	-20°C to +50°C (Less than 85% RH)	Bit Input: 8 Binary Input: 32	IP65	Cable	1.25kg
EHS- M1T									Terminal	
EHV- M1H	DC 12 - 24V	DC 10.8V to 26.4V	4W (at DC24V)	400mA (max)	Alarm: 110dB (at 1m) MP3: 105dB (at 1m)	-20°C to +50°C (Less than 85% RH)	Bit Input: 8 Binary Input: 63	IP65	Cable	1.25kg
EHV- M1T									Terminal	

Note 1: The sound pressure level is based on measurements under controlled conditions (voice-synthesized 1 kHz sine wave played back from a distance of 1 meter), therefore the surrounding environmental conditions and message content will result in different values for the sound pressure level.

Note 2: Even when starting two or more units simultaneously, a lag will occur during message playback.

CLN-EX

CE Ex II 3GD Ex nA IIC T4 Gc, Ex tc IIIC T135°C Dc IP65 94/9/EC (ATEX) CENELEC: EN 60079-0, EN 60079-15, EN 60079-31

Explosion-Safe LED Work Light

Daylight

IP66G/67G/69K

Explosion-Safe

CLN-24-CD-PT-EX

FEATURES

- 820 lx brightness
- 60,000 hrs., or about 7 years of long service life (*1)
- IP66G, IP67G, IP69K protection (*2)
- Low current draw of 174mA
- DC 24V (Polarized)
- Wide operating temperature range (-40 to +60°C)
- IEC62471 Compliance (Photobiological Safety Standard)
- Daylight Color Temperature (6,500K), suitable for very detailed work
- Made of aluminum alloy and tempered glass, is resistant to water, oil and coolants
- Includes a flexible stainless-steel angle bracket to adapt to various scenarios (*3)
- Compact, light-weight, durable design (Thickness:22.2mm x Width: 85mm x Height: 128mm)

*1 : The typical value of LED brightness is 70% of the original specification, but may vary depending on actual applications.
*2 : IP66G and IP67G are Japanese Industrial Standards (JIS C0920-2003), and IP69K is the German DIN 40050 PART9 Standard.
*3 : CLN-24-CD-PT-EX Work Light can only be installed where risk of mechanical danger is limited to 2 Joules of impact energy.

Dimensions

- **Pan/Tilt Type (PT Type)**

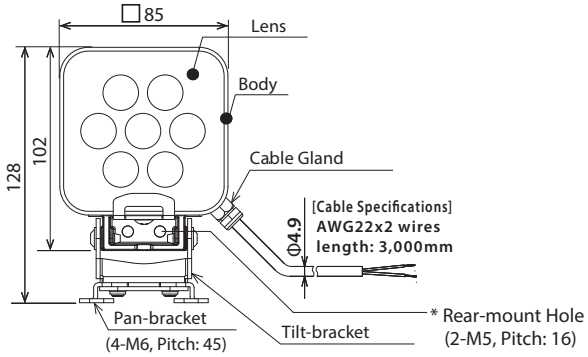

How to Order

CLN-24-CD-PT-EX

Movable Type
T : Tilt
PT : Pan/Tilt

Specifications

Model		CLN-24-CD-PT-EX
Color Code (Color)		CD (Daylight)
Color Temperature (typ.)		6500K
Illumination (typ.) (Centered at DC 24V)	1m	820 lx
Total Luminous Flux (typ.)		550 lm
Rated Voltage		DC 24V (Polarized)
Operating Voltage Range		DC 24V ±10%
Rated Consumption Current/Power Dissipation		174mA ±10% / 4.2W
Operating Ambient Temperature		-40°C to +60°C (90% RH, no condensation)
Main Unit Material		Body: Aluminum Alloy Lens: Tempered Glass
Protection Rating		IP66G/67G (JIS C 0920)/69K (DIN 40050 part 9) (excluding cable ends)
Mounting Location/Direction		Indoor / Any Direction
Insulation Resistance		DC 500V 5MΩ or more between power input and metallic part
Withstand Voltage		500VAC for 1 minute between power input and chassis
Vibration Resistance		30Hz total amplitude 0.3mm^{p-p} (Back and forth, up and down, left and right for 2 hrs each) total amplitude 0.3mm^{p-p} (10-57Hz), Acceleration 19.6m/s^2
Mass (Tolerance ±10%)		430g

CLK-EX

CE II 3GD Ex nA IIC T4 Gc, Ex tc IIIC T135°C Dc IP65 94/9/EC (ATEX) CENELEC: EN 60079-0, EN 60079-15, EN 60079-31

Explosion-Safe LED Work Light

CLK6C-24AG-CD-EX

CLK3S-24AG-CD-EX

FEATURES

- Aluminum Housing
- Tempered glass lens
- IP66G/67G/69K ratings
- Explosion-safe for gas and dust
- Suitable for Zone 2 and Zone 22
- Temperature Range of -40°C to +60°C
- CE Compliance in accordance to ATEX
- 1,200 lx (3S/3C) and 2,100 lx (6S) brightness
- Outdoor installation allows Upright installation only
- LED Color Temperatures of 6,500K (CD) and 5,000K (CN)
- Stainless Steel Housing (available for 350mm long models)
- 250mm length (2S, 350mm length (3S/3C), 650mm length (6S) available

Daylight
Natural White

IP66G/67G/69K

Explosion-Safe

Dimensions

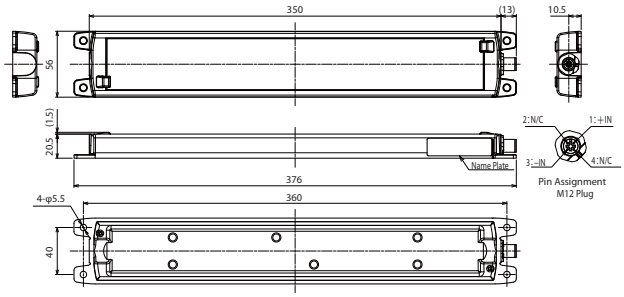

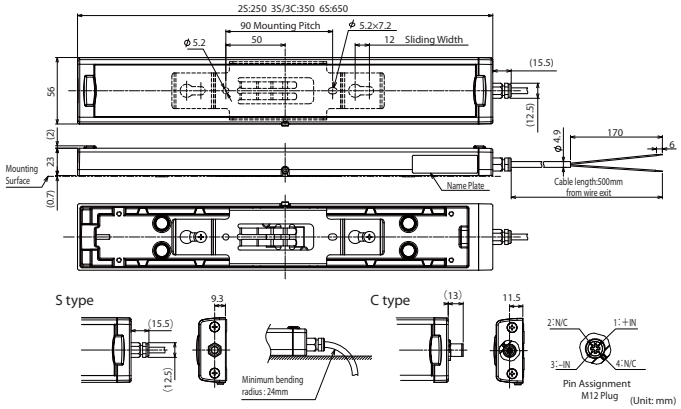

How to Order

CLK-□□-24□-□-EX

- Model
- Illumination Area Size
  2: 200mm 3: 300mm 6: 600mm
- Wiring Specifications
  S: Side-exiting Cable C: M12 Quick Disconnect
- Color
  CD: Daylight
  CN: Natural White
- Body & Lens
  AG: Aluminum & Glass
  SG: Stainless Steel & Glass

Specifications

Model	CLK- [_] [_] -24- [_] [_] - [_ -EX
Color Code (Color)	Natural White (CN) / Daylight (CD)
Rated Voltage	DC 24V
Operating Voltage Range	DC 24V ±10%
Rated Consumption Current	522mA ±40mA (3S / 3C Type)
Light Source	High intensity LED x 18 elements (3S / 3C Type)
Luminous Intensity at Optical Center (lx at 1m)	1200 (3S / 3C Type)
Main Unit Material	Body: Aluminum Alloy or Stainless Steel Lens: Tempered Glass
Operating Temperature Range	-40°C to +60°C (90% RH, no condensation)
Mounting Location/Direction	Indoor / Any Direction
Protection Rating	IP66G/67G (JIS C 0920)/69K (DIN 40050 part 9) (excluding cable ends)
Vibration Resistance	19.6m/s^2
Mass (Tolerance ±10%)	1.49kg

*1 : The LED Work Light can only be installed in places where risk of mechanical danger is limited to an impact energy of 2 Joules. (1kg mass dropped at a 20cm height)

CLA-EX

CE Ex II 3GD Ex nA IIC T4 Gc, Ex tc IIIC T135°C Dc IP65 94/9/EC (ATEX) CENELEC: EN 60079-0, EN 60079-15, EN 60079-31

Explosion-Safe LED Work Light

RoHS CE Ex ECOLAB

Daylight
Natural White

IP66/67/69K

Explosion-Safe

FEATURES

- Explosion-safe for gas and dust
- Suitable for Zone 2 and Zone 22
- CE Compliance in accordance to ATEX
- DC 24V (Polarized, ±10%)
- Cable length: 3 meters
- IP66/67/69K ratings
- Body made of Polycarbonate Resin
- Polycarbonate mounting brackets available
- Lenghts available are; 100mm (140 lx), 200mm (270 lx), 300mm (400 lx), 600mm (650 lx), 900mm (810 lx), 1,200mm (890 lx), 1,500mm (945 lx)
- Temperature Range of -40°C to +60°C (RH 90% or less, no condensation)

Dimensions

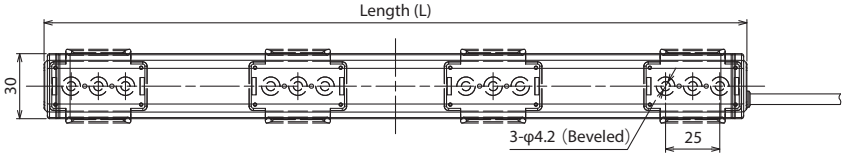

(Unit: mm)

How to Order

CLA□S-24-□-30-EX

LED Color
- CD: Daylight (6800K)
- CN: Natural White (4800K)

Length (L)

1: 100mm	6: 600mm	15: 1,500mm
2: 200mm	9: 900mm	
3: 300mm	12: 1,200mm	

Specifications

Model	Luminous Color	Length	Rated Voltage	Rated Current Consumption	Center Radiation (lx/50cm)	Mounting Direction	Vibration Resistance	Mass
CLA1S -24-CD-EX	Daylight	100mm	DC 24V (Polarized)	104mA	140 lx	Any Direction (Indoors Only)	19.6m/s²	80g
CLA1S -24-CN-EX	Natural White							
CLA2S -24-CD-EX	Daylight	200mm		208mA	270 lx			130g
CLA2S -24-CN-EX	Natural White							
CLA3S -24-CD-EX	Daylight	300mm		240mA	400 lx			180g
CLA3S -24-CN-EX	Natural White							
CLA6S -24-CD-EX	Daylight	600mm		480mA	650 lx			340g
CLA6S -24-CN-EX	Natural White							
CLA9S -24-CD-EX	Daylight	900mm		720mA	810 lx			500g
CLA9S -24-CN-EX	Natural White							
CLA12S -24-CD-EX	Daylight	1200mm		960mA	890 lx			660g
CLA12S -24-CN-EX	Natural White							
CLA15S -24-CD-EX	Daylight	1500mm		1,200mA	945 lx			820g
CLA15S -24-CN-EX	Natural White							

RES-A

TIIS Exd IIB+H2T6

Explosion-Safe Revolving Warning Light

Bulb

Φ224

IP65

Explosion-Safe

Robust Heavy Duty Revolving Warning Light.

FEATURES

- φ224mm Diameter.
- Rotating parabolic reflector to enhance visibility from a distance.
- Upright, inverted, and sideways installation allowed for indoors; and upright for outdoors only.
- Main body is made of Aluminum Alloy Die-cast with silver-colored baked enamel finish.
- Dome is made from superior weather-resistant and light-translucent acrylic resin.
- Available Colors are Red, Amber, Green, and Blue.

*Cable Glands are optional parts and need to be ordered separately.

Dimensions

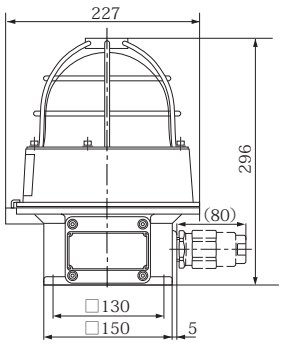

Mounting Dimensions

Mounting Hole

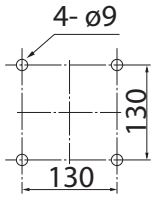

(Unit: mm)

Specifications

Model	Rated Voltage	Current	Flash Rate (fpm)	Bulb		Mass
				Ratings	Repl. No.	
◎ RES-12A	DC 12V	0.9A	170	12V 10W	9	6.5kg
◎ RES-24A	DC 24V	0.5A		24V 10W	10	
◎ RES-48A	DC 48V	0.3A	150	48V 10W	11	
RES-100A	AC 100V - 110V	0.1A	170	12V 5W	12	
◎ RES-120A	AC 115V - 120V					
RES-220A	AC 200 - 220V	0.05A				
◎ RES-240A	AC 230 - 240V					

Bulb: G18 BA15S

◎ Special Order

MEMO

Signal Tower

ME-A/MES-A

Signal Tower

LED

IP42

Φ25

NPN Open-collector

Cable

Super-slim 25mm Signal Tower with aluminum body, ideal for small devices.

FEATURES

- PATLITE's exclusive hybrid prism-cut lens designed for enhanced visibility from any direction and distance.
- Lens is made of superior impact and heat resistant polycarbonate resin for superior durability and light transmission.
- Available Colors are in Red, Amber, Green, Blue, and Clear/White.
- Specially enhanced high intensity illumination design.
- Direct mount installation with just a single hole.
- Interchangeable Modules need no re-wiring, even after installation.
- Main body is constructed of corrosion resistant anodized aluminum to retain its external beauty.
- Body Length for MES-A is 40mm, and for the ME-A is 200mm.
- Conforms to the CE requirements.
- UL recognized components (File No. E215660)

AVAILABLE BY SPECIAL ORDER

- Cable: Versatile and flexible 3m cable.
- IP54 (for ME/MES).
- PNP Compatible: ME and MES 24V Types.

How to Order

ME-502A-RYGBC

- Body Style: ME : Standard; MES: Short
- Tiers: 1~5
- Rated Voltage: 02: DC 24V
- Color: R: Red; Y: Amber; G: Green; B: Blue; C: Clear/White (Top to bottom)

Easy to add and remove

- When adding or removing modules, the center shaft that matches the amount of tiers has to be purchased.

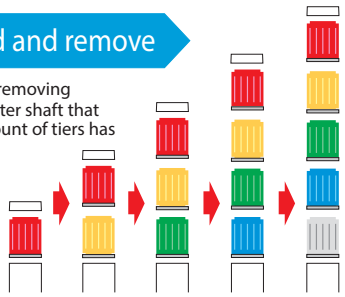

Interchangeable LED Modules

Changeable color sequence: Easy to add/ remove up to 5 colored modules even after installation.

Note: LED modules of the same color within a signal tower will light up simultaneously.

Wiring doesn't change

- The LED Module colors correspond to the wiring, so re-wiring is not necessary.

Dimensions

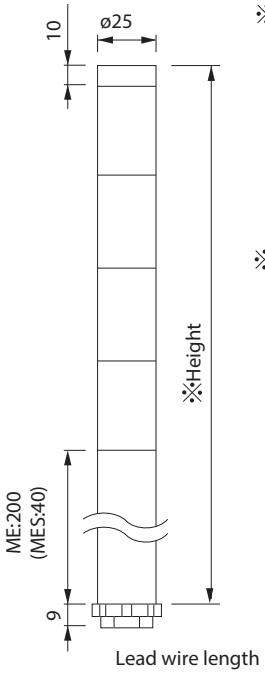

※ ME-A Type

Height
1 Tier : 240
2 Tiers: 270
3 Tiers: 300
4 Tiers: 330
5 Tiers: 360

※ MES-A Type

Height
1 Tier : 80
2 Tiers: 110
3 Tiers: 140
4 Tiers: 170
5 Tiers: 200

Lead wire length
(from wire exit)
ME-A: 300mm
MES-A: 460mm

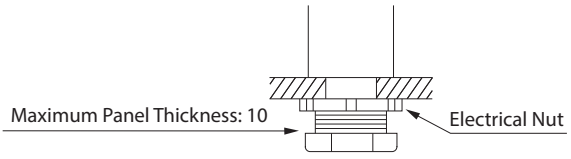

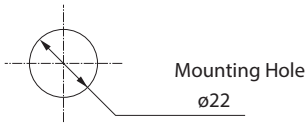

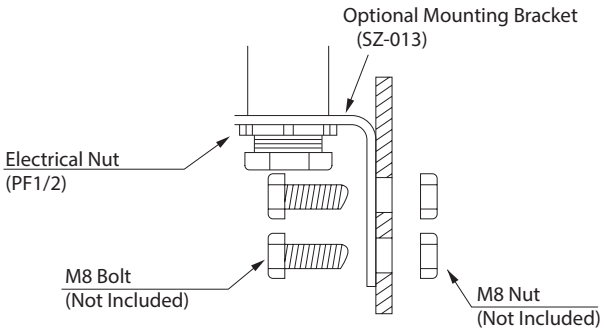

(Unit: mm)

Wiring

- ME-A/MES-A Contact/ Switch

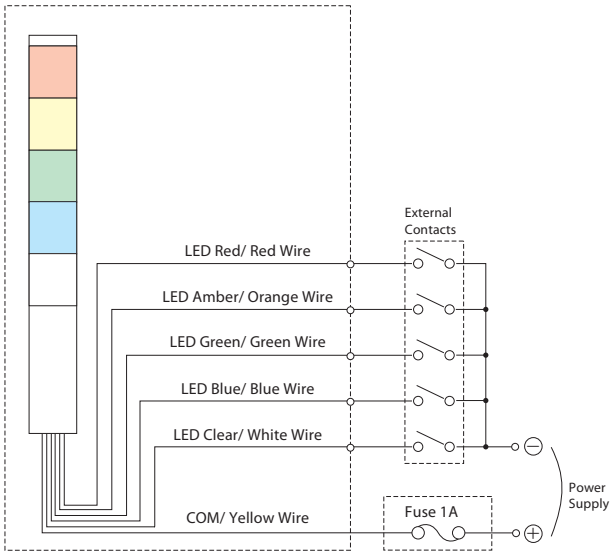

- ME-A/MES-A NPN Open Collector

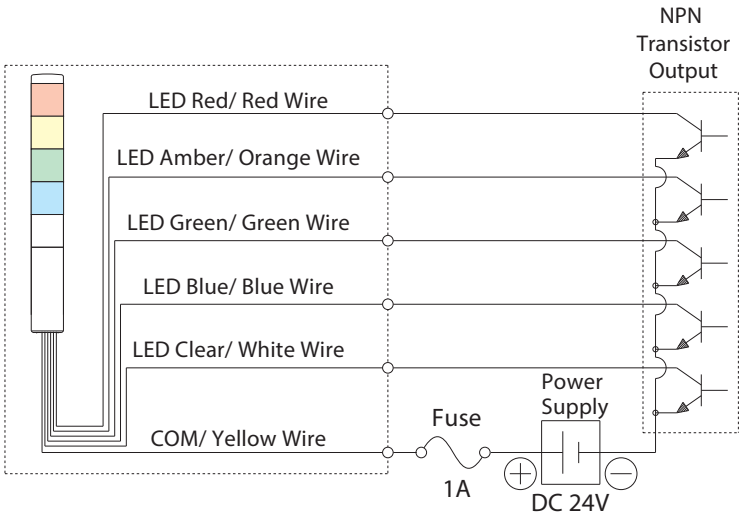

Specifications

Stack Number	Model	Rated Voltage	Power Consumption	Mass	
				ME	MES
1 Tier	ME/MES-102A-R	DC 24V	0.6W	220g	120g
	ME/MES-102A-Y		0.6W		
	ME/MES-102A-G		0.5W		
	ME/MES-102A-B		0.5W		
	ME/MES-102A-C		0.5W		
2 Tiers	ME/MES-202A-RY		1.2W	230g	130g
	ME/MES-202A-RG		1.1W		
	ME/MES-202A-RB		1.1W		
	ME/MES-202A-RC		1.1W		
3 Tiers	ME/MES-302A-RYG		1.7W	240g	140g
	ME/MES-302A-RYB		1.7W		
	ME/MES-302A-RYC		1.7W		
4 Tiers	ME/MES-402A-RYGB		2.3W	250g	150g
	ME/MES-402A-RYGC		2.3W		
5 Tiers	ME/MES-502A-RYGBC		2.8W	260g	160g

MP / MPS

Signal Tower

LED

IP65

Φ30

Cable

NPN/PNP
Open-collector

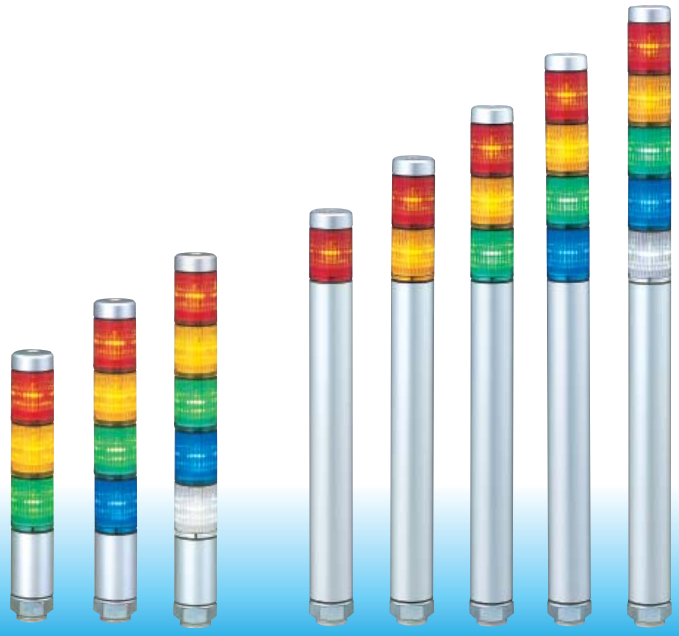

Super slim 30mm silver body Signal Tower, ideal for small devices.

Patented reflection system increases visibility.

High-intensity LED | Good visibility from any direction

FEATURES

- PATLITE's exclusive hybrid prism-cut lens designed for enhanced visibility from any direction and distance.
- Double-insulated construction for enhanced durability and safety in the work environment.
- Direct mount installation with just a single hole.
- Interchangeable Modules need no re-wiring, even after installation.
- Main body is constructed of superior impact and heat resistant ABS resin.
- Lens is made of superior weather resistant and light translucent AS resin.
- Available Colors are in Red, Amber, Green, Blue, and Clear/White.
- Conforms to the CE requirements.
- UL Recognized Components (File No. E215660)

AVAILABLE BY SPECIAL ORDER

- All Clear Lenses: Distinctive color recognition when operated with clear lenses (B0738 type).
- Cable: Versatile and flexible 3m cable.

Optional MP-B Buzzer
(See pg. 199)

Easy to add and remove

- When adding or removing modules, the center shaft that matches the amount of tiers has to be purchased.

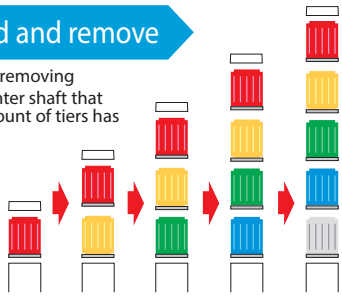

Interchangeable LED Modules

Changeable color sequence: Easy to add/ remove up to 5 colored modules even after installation.

Note: LED modules of the same color within a signal tower will light up simultaneously.

Wiring doesn't change

- The LED Module colors correspond to the wiring, so re-wiring is not necessary.

How to Order

MP-502-RYGBC

- Model
  - MP : Standard Body
  - MPS: Short Body
- Tiers
  - 1~5
- Rated Voltage
  - 02: AC/DC 24V
- Color
  - R: Red
  - Y: Amber
  - G: Green
  - B: Blue
  - C: Clear/White
  - (Top to bottom)

Clear Lens Type: Model No. with B0738

Specifications

Stack Number	Model	Rated Voltage	Power Consumption	Mass	
				MP	MPS
1 Tier	MP/MPS-102	AC/DC 24V	0.7W	210g	110g
2 Tiers	MP/MPS-202		1.4W	230g	130g
3 Tiers	MP/MPS-302		2.0W	250g	150g
4 Tiers	MP/MPS-402		2.6W	270g	170g
5 Tiers	MP/MPS-502		3.2W	290g	190g

Dimensions

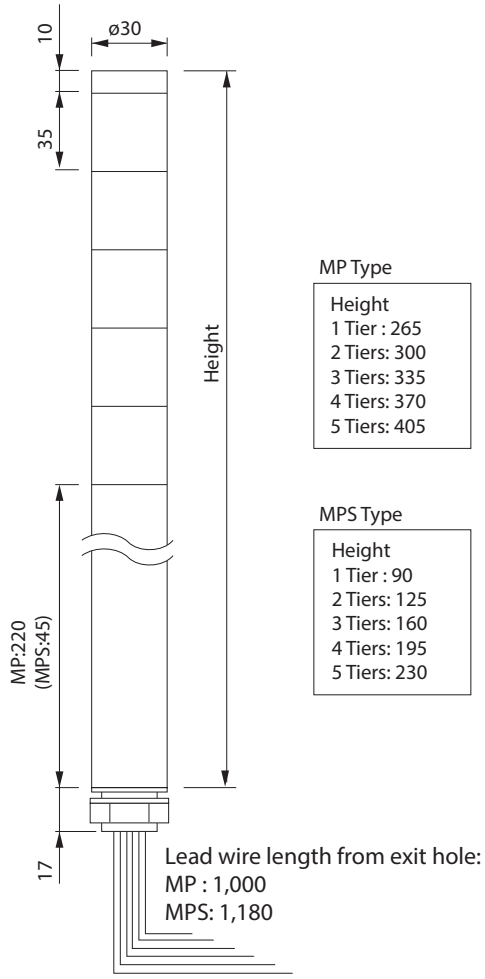

MP Type

Height
1 Tier : 265
2 Tiers: 300
3 Tiers: 335
4 Tiers: 370
5 Tiers: 405

MPS Type

Height
1 Tier : 90
2 Tiers: 125
3 Tiers: 160
4 Tiers: 195
5 Tiers: 230

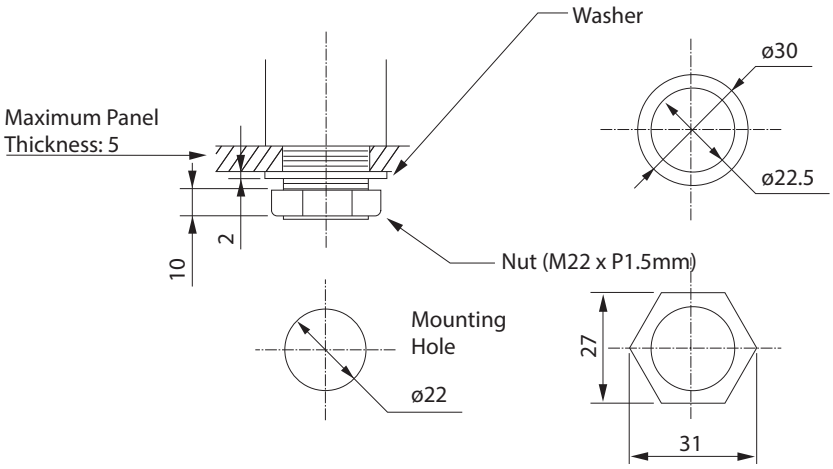

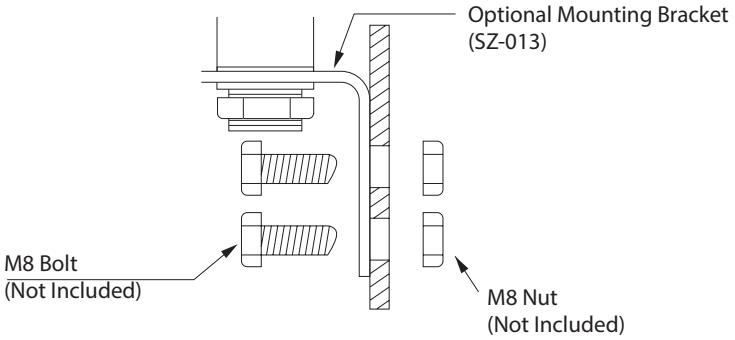

(Unit: mm)

Wiring

- MP/MPS Contact/ Switch

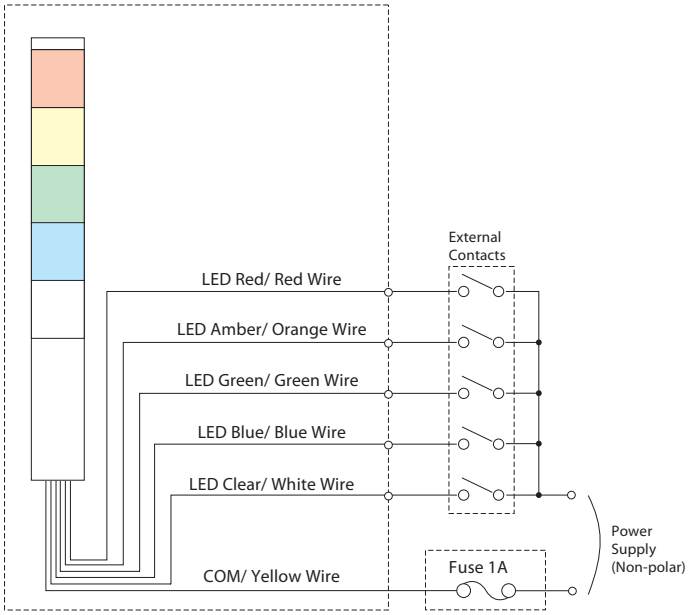

- MP/MPS NPN Open Collector

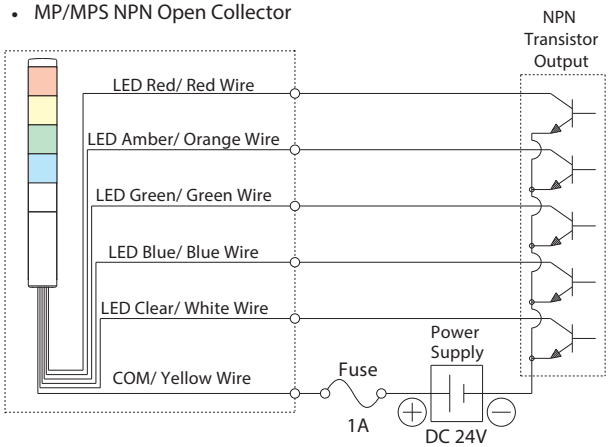

- MP/MPS PNP Open Collector

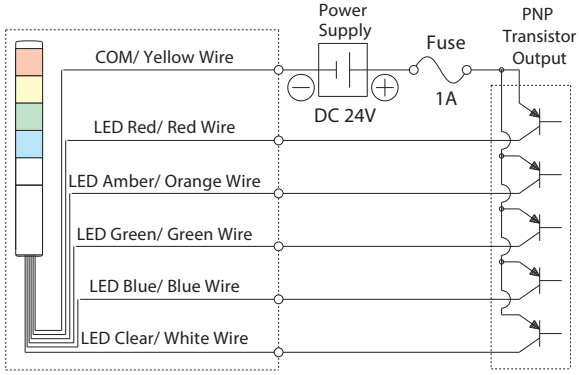

MP-C

Signal Tower

LED

IP65

Φ30

M12 Cable

NPN/PNP
Open-collector

Super slim 30mm silver body Signal Tower with M12 disconnect.

Patented reflection system increases visibility.

High-intensity LED | Good visibility from any direction

FEATURES

- Quick Disconnect M12 connector for the MP Signal Tower.
- PATLITE's exclusive hybrid prism-cut lens designed for enhanced visibility from any direction and distance.
- Double-insulated construction for enhanced durability and safety in the work environment.
- Direct mount installation with just a single hole.
- Interchangeable Modules need no re-wiring, even after installation.
- Main body is constructed of superior impact and heat resistant ABS resin.
- Lens is made of superior weather resistant and light translucent AS resin.
- Available in 1, 2 or 3 tier stacks with colors in Red, Amber and Green.
- Conforms to the CE requirements.
- UL Recognized Components (File No. E215660)

Optional MP-B Buzzer
(See pg. 199)

Easy to add and remove

- When adding or removing modules, the center shaft that matches the amount of tiers has to be purchased.

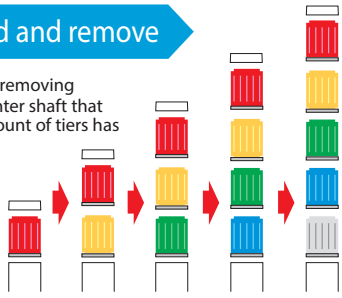

Interchangeable LED Modules

Changeable color sequence: Easy to add/ remove up to 5 colored modules even after installation.

Note: LED modules of the same color within a signal tower will light up simultaneously.

Wiring doesn't change

- The LED Module colors correspond to the wiring, so re-wiring is not necessary.

How to Order

MP-302-C-RYG

- Model: MP : Standard Body
- Tiers: 1~3
- Rated Voltage: 02: AC/DC 24V
- Lead Type: Blank : Wire Leads; C : M12 Quick Disconnect
- Color: R: Red, Y: Amber, G: Green (Top to bottom)

Specifications

Stack Number	Model	Rated Voltage	Power Consumption	Mass
1 Tier	MP/MPS-102	AC/DC 24V	0.7W	240g
2 Tiers	MP/MPS-202		1.4W	260g
3 Tiers	MP/MPS-302		2.0W	280g

Part Names and Dimensions

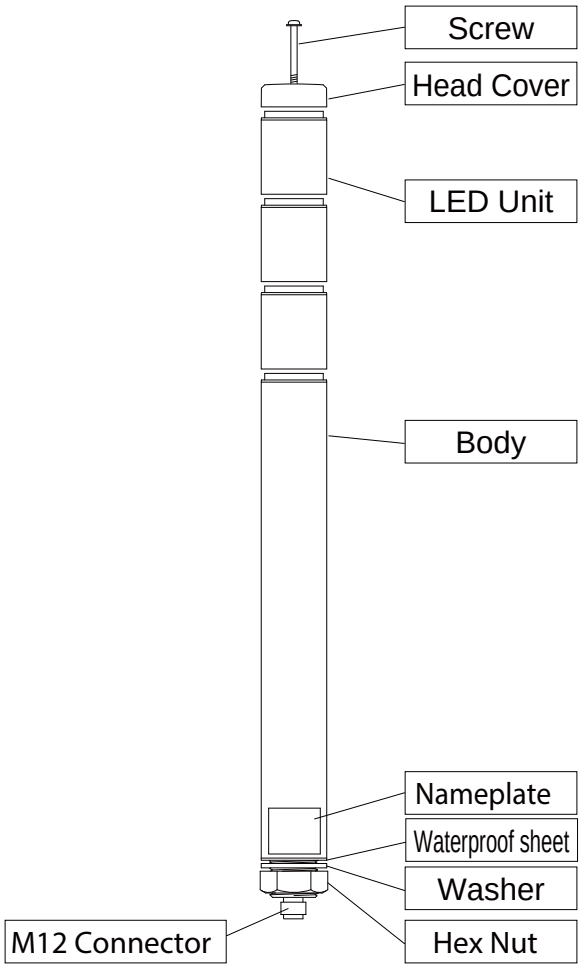

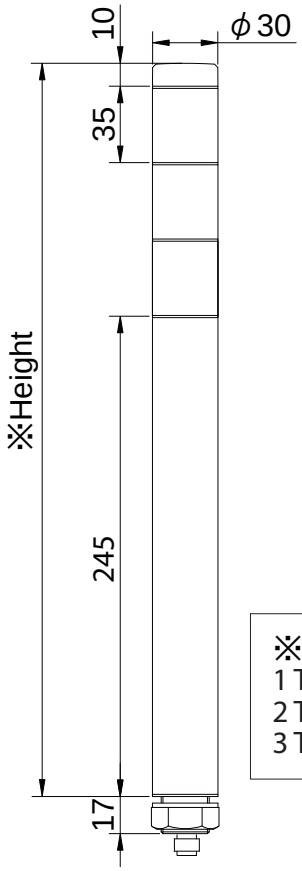

※ Height
1 Tier : 290
2 Tiers: 325
3 Tiers: 360

(Unit: mm)

Wiring

External Contact Capacity

I_s : Current Capacity V_s : Withstand Voltage

LED Unit (1 Tier)	Current Consumption	Red: 29.0mA Amber: 29.5mA	Green: 23.9mA
	Capacity	I_s≥50mA	V_s≥35V DC
Power Supply	Current Consumption	200mA	
	Capacity	I_s≥200mA	V_s≥35V DC

M12 Connector Pin No.

Pin No.	LED Unit Color
1	Green
2	Red
3	Common
4	Amber

- MP-C M12 Connector

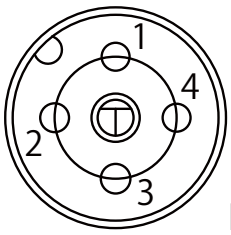

M12 Connector
Pin Layout

LCE/LCE-U

Signal Tower

LED

2 Alarm Sounds (FB Type)

85db at 1m (FB Type)

IP65 (LCE-FB Type: IP54)

Φ40

Cable

NPN/PNP Open-collector

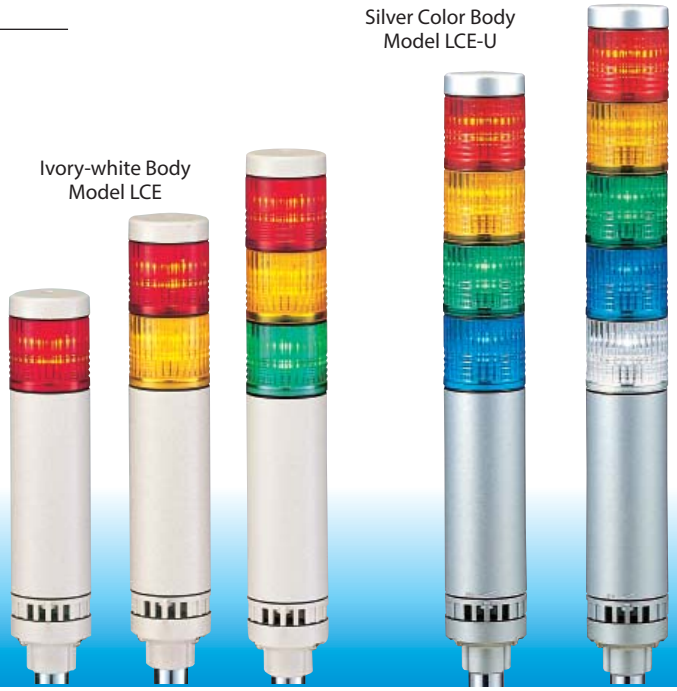

High visibility from any angle

Adjustable Volume (Max. 85dB at 1m)

Dual Reflection System

PATLITE's original dual reflection system with its exclusive hybrid prism-cut lens and 5 color LED modules creates a bright, distinctive and even illumination.

The low-priced, high quality LED Signal Tower featuring low maintenance and energy savings.

FEATURES

- PATLITE's exclusive hybrid prism-cut lens designed for enhanced visibility from any direction and distance.
- Original Dual Reflection System for enhanced light diffusion; creating bright, distinctive illumination while saving energy.
- Two Built-in Alarms (FB Type) with selectable sound patterns.
- Adjustable volume with a maximum of 85dB (at 1m).
- Direct or pole mount installation.
- Color-coordinated Wiring Corresponding to the lens color for quick wiring and verification.
- Interchangeable LED Modules requires no re-wiring, even after installation.
- Main body made of ABS resin with superior resistance to impact and heat. (U type has silver body and 3m cable)
- Lens is made of superior impact resistant and light translucent AS resin.
- NPN/PNP Compatible inputs for 24V DC type (M2 type compatible with NPN only).
- Available Colors are in Red, Amber, Green, Blue, and Clear/White.
- High visibility from any angle.
- Conforms to the CE requirements (for 24V type).
- UL Recognized Components (File No. E215660).
- NEMA Type 4/4X/13 for -W, -FBW Only

How to Order

LCE-502UFBW-RYGBC-Z

- Tiers: 1~5
- Rated Voltage: 02: AC/DC 24V; M2: AC 90~250V
- Body Color: Blank : Ivory White; U : Silver
- Type: Blank: Continuous light; FB: Flashing/ Alarm
- Mount: Blank: SZ-012 Pole Mount; K: SZ-021 Pole Mount; W: Direct Mount
- LED Color: R: Red; Y: Amber; G: Green; B: Blue; C: Clear/White (Top to bottom)
- Lens Color: Blank: Colored lens; Z: Clear lens

Easy to add and remove

- When adding or removing modules, the center shaft that matches the amount of tiers has to be purchased.

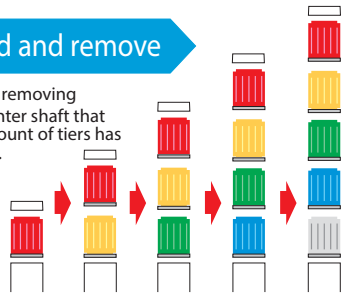

Interchangeable LED Modules

Changeable color sequence: Easy to add/ remove up to 5 colored modules even after installation.

Note: LED modules of the same color within a signal tower will light up simultaneously.

Wiring doesn't change

- The LED Module colors correspond to the wiring, so re-wiring is not necessary.

Dimensions

LCE Type
LCE-U Type

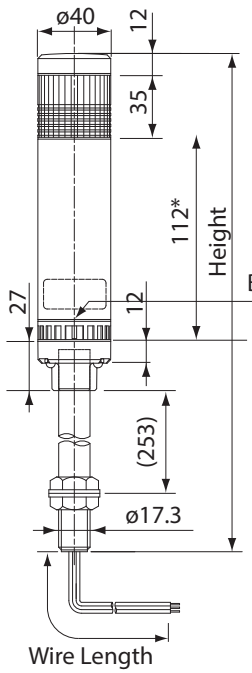

*M2-FB Type:167

Side-Mount Bracket

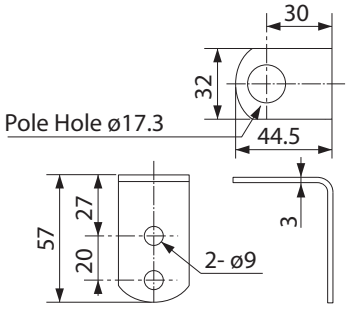

Direct-mount Dimensions

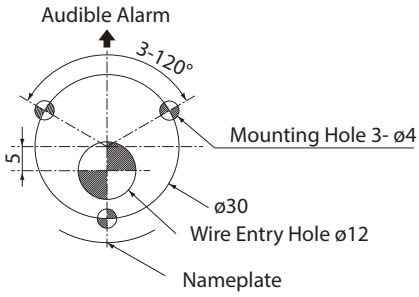

LCE-W Type
LCE-UW Type

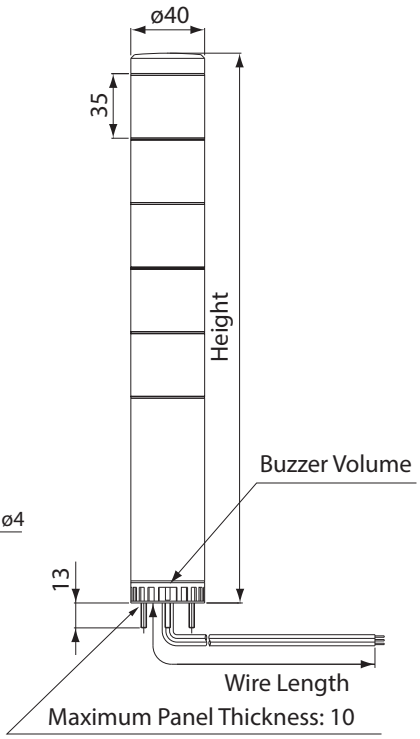

LCE-M2FB Type

Height
1 Tier : 213
2 Tiers: 248
3 Tiers: 283
4 Tiers: 318
5 Tiers: 353

LCE Type
LCE-U Type

Height
1 Tier : 158
2 Tiers: 193
3 Tiers: 228
4 Tiers: 263
5 Tiers: 298

(Unit: mm)

Wire Type and Length Chart

Model

LCE-02

Wire Area: 0.3mm² Wire Type: UL1007 Wire Length (mm): 1,100 (W Type: 1,400)
(W Type Brown Wire: 1,350)

LCE-(FB)

Wire Length: All K Type have wire length of 1,000mm

LCE-M2

Signal Wire Area: 0.3mm² Wire Type: UL1007 Wire Length (mm): 1,050 (W Type: 1,350)
Power/Ground Wire Area: 0.75mm² Wire Type: UL1015 Wire Length (mm): 1,050 (W Type: 1,350)

LCE M2FB

Signal Wire Area: 0.3mm² Wire Type: UL1007 Wire Length (mm): 950 (W Type: 1,250)
Power/Ground Wire Area: 0.75mm² Wire Type: UL1015 Wire Length (mm): 950 (W Type: 1,250)

Standard Mounting Bracket SZ-012

Mounting Bracket SZ-021

Optional Mounting Bracket SZ-011

Specifications

Stack Number	Model	Rated Voltage	Power Consumption	Mass			
				LCE	LCE-W	LCE-FB	LCE-FBW
1 Tier	LCE-102(U)	AC/DC 24V	1.7W	520g	160g	580g	220g
	LCE-1M2	AC 90 -250V	1.9W	600g	240g	650g	290g
2 Tiers	LCE-202(U)	AC/DC 24V	2.4W	550g	190g	610g	250g
	LCE-2M2	AC 90 -250V	2.6W	630g	270g	680g	320g
3 Tiers	LCE-302(U)	AC/DC 24V	3.0W	580g	220g	640g	280g
	LCE-3M2	AC 90 -250V	3.2W	660g	300g	710g	350g
4 Tiers	LCE-402(U)	AC/DC 24V	3.6W	610g	250g	670g	310g
	LCE-4M2	AC 90 -250V	3.8W	690g	330g	740g	380g
5 Tiers	LCE-502(U)	AC/DC 24V	4.2W	640g	280g	700g	340g
	LCE-5M2	AC 90 -250V	4.4W	720g	360g	770g	410g

Wiring

- AC/DC 24V Lighting Type

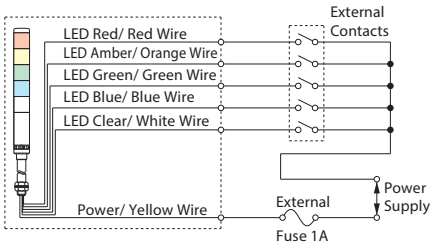

- AC 90 - 250V Lighting Type

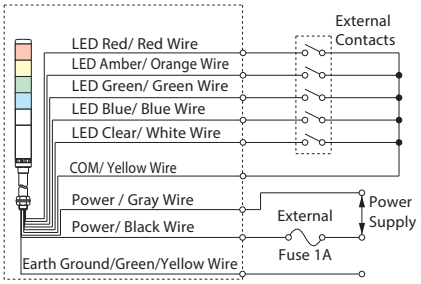

Lead-wire color coordination table

LED Unit Color	Lead Wire Color
Red	Red
Amber	Orange
Green	Green
Blue	Blue
Clear/White	White

Alarm Sounds	Lead Wire Color
Buzzer 1	Purple
Buzzer 2	Skyblue

- AC/DC 24V Lighting/Flashing Type

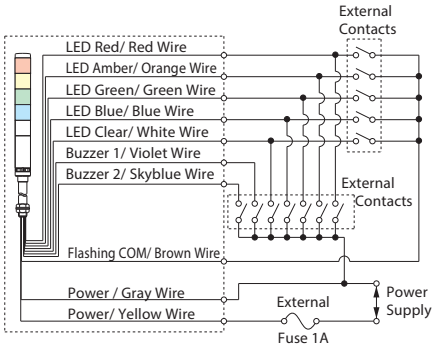

- AC 90 - 250V Lighting/Flashing Type

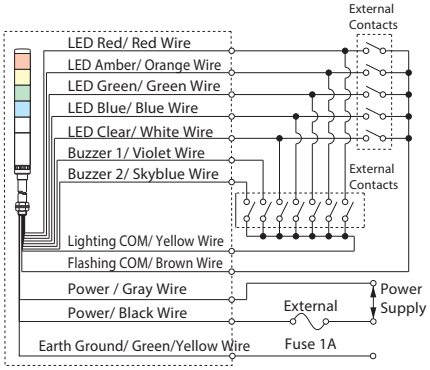

- DC 24V NPN Type

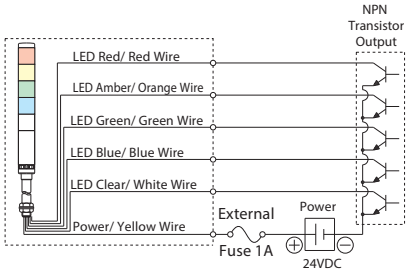

- DC 24V PNP Type

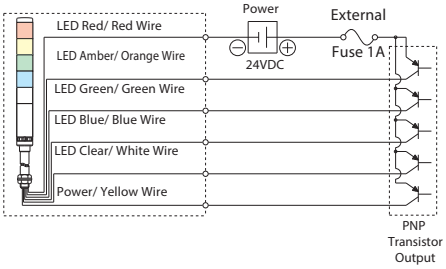

- AC 90 - 250V NPN Type

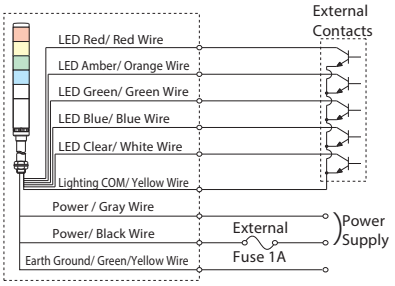

- DC 24V NPN FB Type

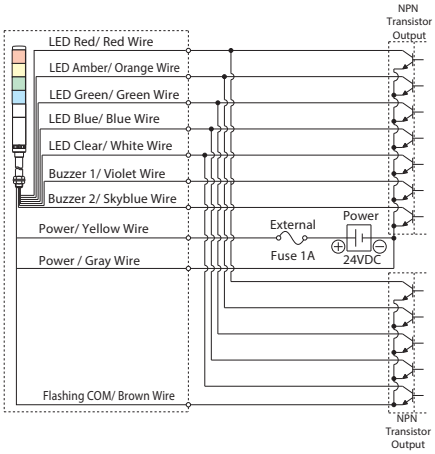

- DC 24V PNP FB Type

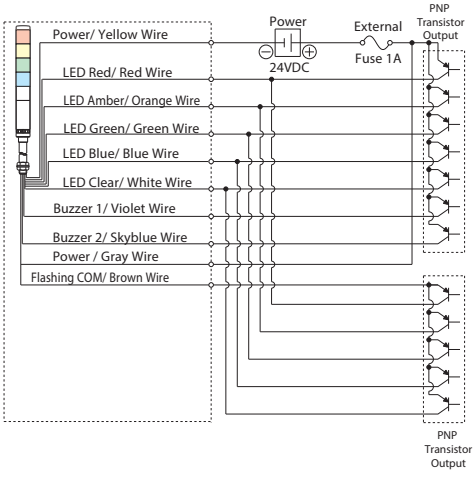

- AC 90 - 250V NPN FB Type

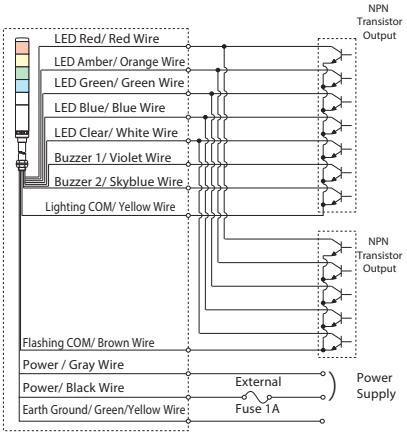

Signal Line voltage and current per LED Module

Model	Rated Voltage	Signal Line Voltage	LED		Alarm	
			Signal Line Current		Signal Line Current	Inrush Current
			R, Y	G, B, C		
LCE/LCE-U	AC/DC 24V	AC/DC 24V	30mA	25mA	40mA	250mA
LCE-M2	AC 90V - 250V	DC 24V	30mA	25mA	40mA	250mA

LCS/LCS-U

Signal Tower

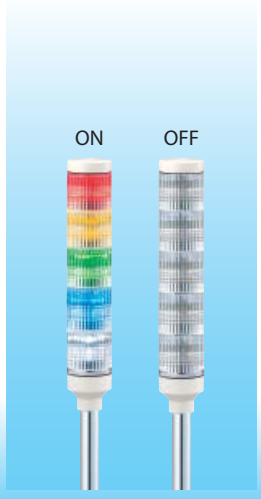

When ordering the clear-lens Signal Tower type, be sure to add "-Z" at the end of the part number when ordering

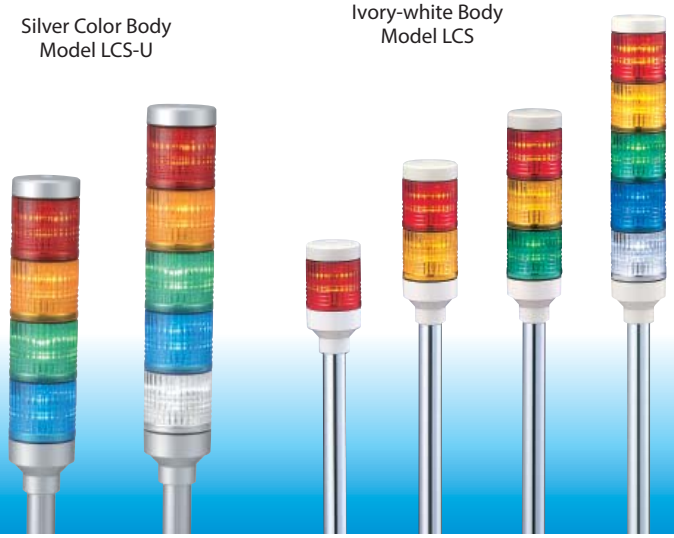

RoHS

LED

IP54

Φ40

NPN/PNP Open-collector

Versatile LED Signal Tower, featuring high quality with low price.

Dual Reflection System

PATLITE's original dual reflection system with its exclusive hybrid prism-cut lens and 5 color LED modules creates a bright, distinctive and even illumination.

High visibility from any angle

FEATURES

- PATLITE's exclusive hybrid prism-cut lens designed for enhanced visibility from any direction and distance.
- Original Dual Reflection System for enhanced light diffusion; creating bright, distinctive illumination while saving energy.
- Direct or pole mount installation.
- Color-coordinated wiring corresponding to the lens color for quick wiring and verification.
- Interchangeable LED Modules requires no re-wiring, even after installation.
- Main body made of ABS resin with superior resistance to impact and heat.
- Lens is made of superior impact resistant and light translucent AS resin.
- Available Colors are in Red, Amber, Green, Blue, and Clear/White.
- Has the CE mark and conforms to the requirements for the EC directive.
- Is a UL Recognized Component (File No. E215660).

AVAILABLE BY SPECIAL ORDER

- Cable: Versatile and flexible 3m cable.
- Body Color: Silver (LCS-U)
- All Clear Lenses: Distinctive color recognition when operated with clear lenses (B0738 type)
- Available Colors: Red, Amber, Green, Blue, White

Easy to add and remove

- When adding or removing modules, the center shaft that matches the amount of tiers has to be purchased.

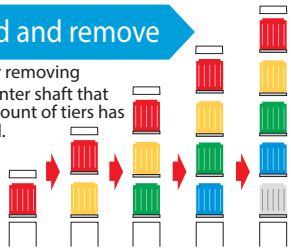

Interchangeable LED Modules

Changeable color sequence: Easy to add/ remove up to 5 colored modules even after installation.

Note: LED modules of the same color within a signal tower will light up simultaneously.

Wiring doesn't change

- The LED Module colors correspond to the wiring, so re-wiring is not necessary.

How to Order

LCS-502K- RYGBC-Z

- Tiers: 1~5
- Rated Voltage: 02: AC/DC 24V
- Mount: Blank: SZ-012 Pole Mount; K: SZ-021 Pole Mount
- LED Color: R: Red; Y: Amber; G: Green; B: Blue; C: Clear/White (Top to bottom)
- Lens Color: Blank: Colored lens; Z: Clear lens

Dimensions

LCS Type

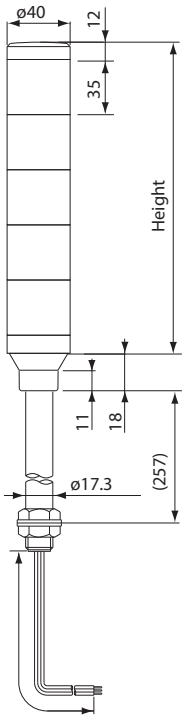

Wire Exit: about 1,150

LCS-K Type

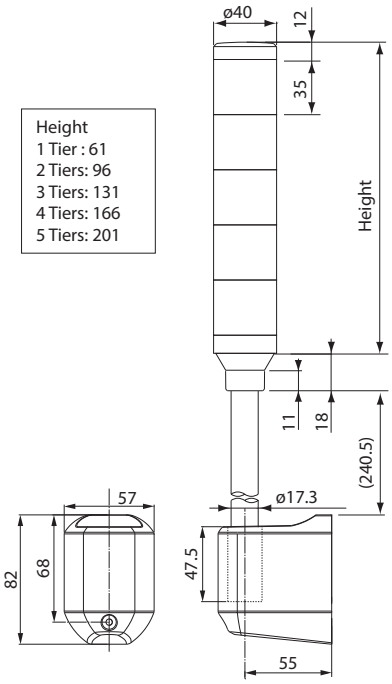

Height
1 Tier : 61
2 Tiers: 96
3 Tiers: 131
4 Tiers: 166
5 Tiers: 201

Side-Mount Bracket

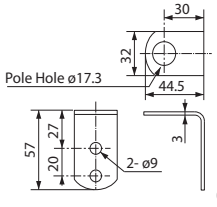

(Unit: mm)

Specifications

Stack Number	Model	Rated Voltage	Power Consumption	Mass	
				LCS	LCS-K
1 Tier	LCS-102	AC/DC 24V	0.7W	420g	540g
2 Tiers	LCS-202		1.4W	450g	570g
3 Tiers	LCS-302		2.0W	480g	600g
4 Tiers	LCS-402		2.6W	510g	—
5 Tiers	LCS-502		3.2W	540g	—

Wiring

- AC/DC 24V Lighting Type

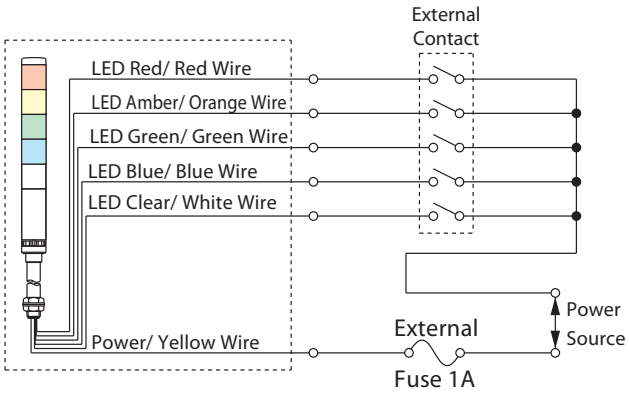

Lead-wire color coordination table

LED Unit Color	Lead Wire Color
Red	Red
Amber	Orange
Green	Green
Blue	Blue
Clear/White	White

Alarm Sounds	Lead Wire Color
Buzzer 1	Purple
Buzzer 2	Skyblue

Signal Line voltage and current per LED Module

Model	Voltage Type	Signal Line Voltage	LED		Alarm	
			Signal Line Current		Signal Line Current	Inrush Current
			R, Y	G, B, C		
LCS	AC/DC 24V	AC/DC 24V	30mA	25mA	40mA	250mA

- DC 24V NPN Type

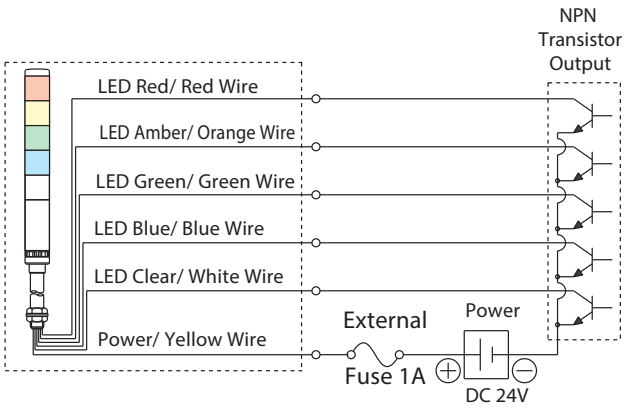

- DC 24V PNP Type

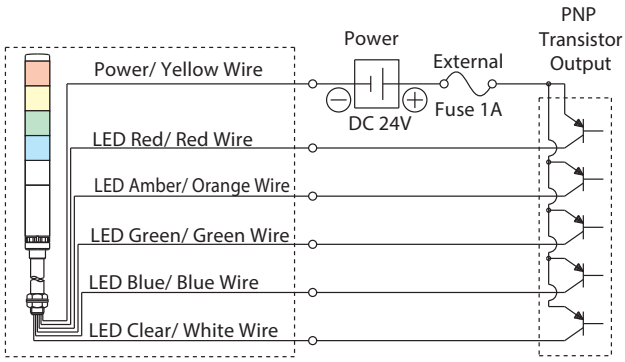

LES-A

Signal Tower

LES-A

LED

IP54 (Pole-mount IP23)

Φ50

NPN/PNP Open-collector

Versatile, cost and energy efficient LED Signal Tower for every need.

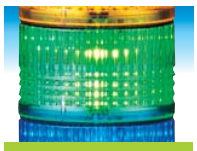

High visibility from any angle

Dual Reflection System

PATLITE's original dual reflection system with its exclusive hybrid prism-cut lens and 5 color LED modules creates a bright, distinctive and even illumination.

FEATURES

- PATLITE's exclusive Prism-Cut Lens designed for enhanced visibility from any direction and distance.
- Original Dual Reflection System for enhanced light diffusion; creating bright, distinctive illumination while saving energy.
- Direct or pole mount installation.
- Main body is constructed of ABS resin with superior resistance to impact and heat.
- Lens is made of superior impact resistant and light translucent AS resin.
- NPN/PNP Compatible.
- Conforms to the CE requirements.
- UL Recognized Components (File No. E215660).
- Available colors* are in Red, Amber, Green, Blue, and Clear/White.
  * Tiers cannot be increased due to the number of wires corresponding to the amount of tiers.

How to Order

LES-502AW-RYGBC

- Tiers: 1~5
- Rated Voltage: 02: AC/DC 24V
- Mounting: Blank: Pole Mount (with SZ-012) / W: Direct Mount
- Color: R: Red, Y: Amber, G: Green, B: Blue, C: Clear/White (Top to bottom)

Specifications

Stack Number		Model	Rated Voltage	Power Consumption	Mass
Pole Type	1 Tier	LES-102A	AC/DC 24V	0.6W	500g
	2 Tiers	LES-202A		1.2W	530g
	3 Tiers	LES-302A		1.7W	560g
	4 Tiers	LES-402A		2.2W	590g
	5 Tiers	LES-502A		2.7W	600g
Direct Mount Type	1 Tier	LES-102AW		0.6W	70g
	2 Tiers	LES-202AW		1.2W	100g
	3 Tiers	LES-302AW		1.7W	130g
	4 Tiers	LES-402AW		2.2W	160g
	5 Tiers	LES-502AW		2.7W	190g

Dimensions

LES-A Type

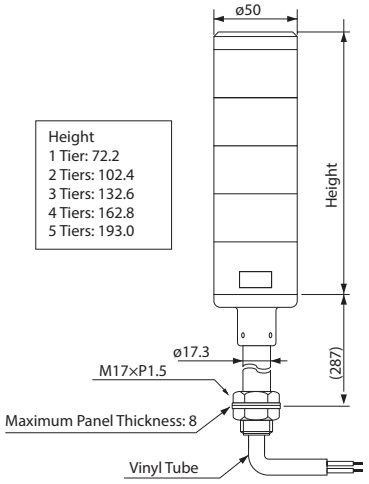

LES-AW Type

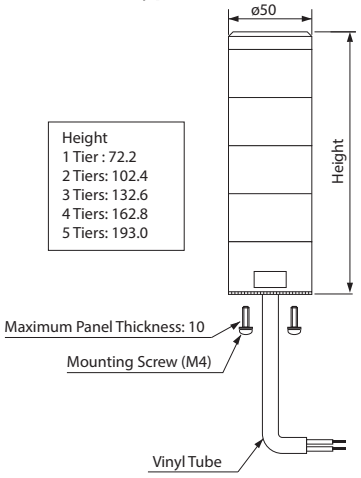

Lead-wire color coordination table

LED Unit Color	Lead Wire Color
Red	Red
Amber	Orange
Green	Green
Blue	Blue
Clear/White	White

Side-Mount Bracket

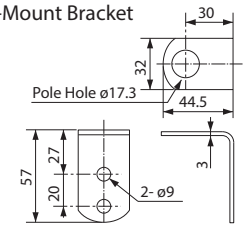

Mounting Dimension

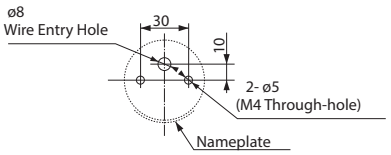

(Unit: mm)

LES Model

- AC/DC 24V Lighting Type

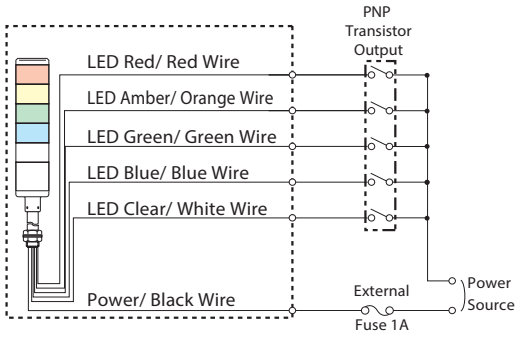

- DC 24V NPN Type

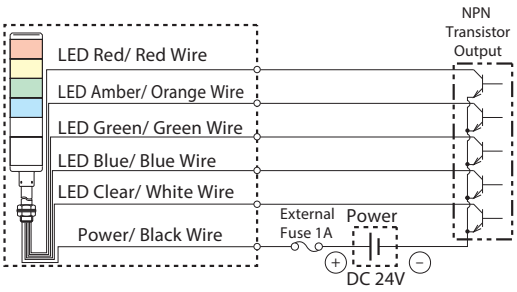

- DC 24V PNP Type

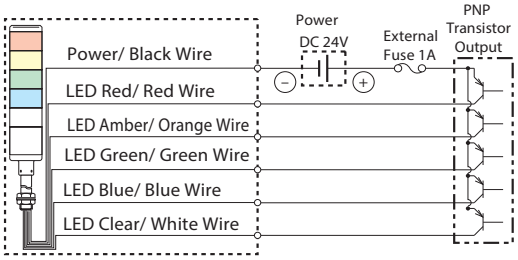

Signal Line voltage and current per LED Module

Model	Voltage Type	Signal Line Voltage	LED			Alarm	
			Signal Line Current			Signal Line Current	Inrush Current
			R, Y	G, C	B		
LES	AC/DC 24V	AC/DC 24V	25mA	20mA	22mA	40mA	150mA

LE

Signal Tower

Direct Mount

Pole Mount

- LED
- 2 Alarm Sounds (FB Type)
- 85dB at 1m
- IP54 (Pole-mount IP23)
- Φ50
- NPN/PNP Open-collector

Versatile, cost and energy efficient LED Signal Tower for every need.

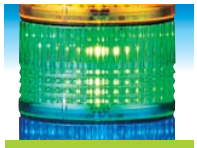

High visibility from any angle

Dual Reflection System

PATLITE's original dual reflection system with its exclusive hybrid prism-cut lens and 5 color LED modules creates a bright, distinctive and even illumination.

FEATURES

- PATLITE's exclusive Prism-Cut Lens designed for enhanced visibility from any direction and distance.
- Original Dual Reflection System for enhanced light diffusion; creating bright, distinctive illumination while saving energy.
- Two built-in alarms (FB Type) with selectable sound patterns.
- Adjustable volume of up to 85dB (at 1m).
- Direct or pole mount installation.
- Color-coordinated wiring corresponding to the lens color for quick wiring and verification.
- Interchangeable Modules need no re-wiring, even after installation.
- Main body is constructed of ABS resin with superior resistance to impact and heat.
- Lens is made of superior impact resistant and light translucent AS resin.
- NPN/PNP Compatible (Except for LE 100/220V AC, compatible with NPN only).
- Available colors are in Red, Amber, Green, Blue, and Clear/White.
- Conforms to the CE requirements (for 12V, 24V type only).
- UL Recognized Components (File No. E215660) (for 12V,24V type only).

Easy to add and remove

- When adding or removing modules, the center shaft that matches the amount of tiers has to be purchased.

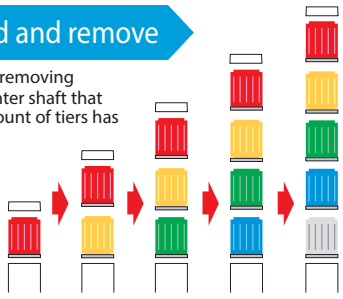

Interchangeable LED Modules

Changeable color sequence: Easy to add/ remove up to 5 colored modules even after installation.

Note: LED modules of the same color within a signal tower will light up simultaneously.

Wiring doesn't change

- The LED Module colors correspond to the wiring, so re-wiring is not necessary.

How to Order

LE-502FBW-RYGBC

Tiers
1~5

Rated Voltage
01: AC/DC 12V
02: AC/DC 24V
10: AC 100V
20: AC 220V

Type
Blank: Continuous light
FB: Flashing/ Alarm

Mounting
P: SZ-012 Pole Mount
W: Direct Mount

Color
R: Red
Y: Amber
G: Green
B: Blue
C: Clear/White
(Top to bottom)

Dimensions

LE Type **LE-FB Type**

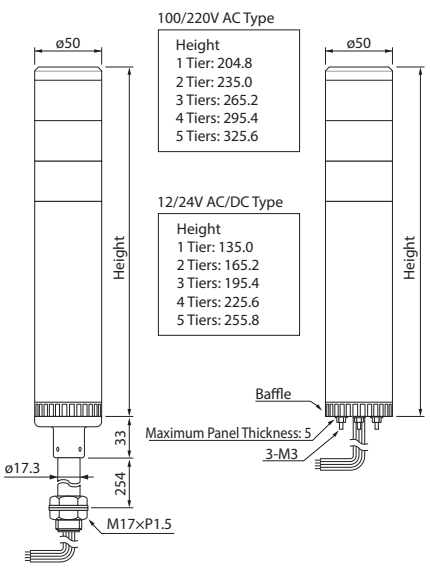

Side-Mount Bracket

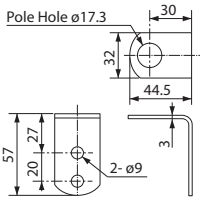

Mounting Dimension

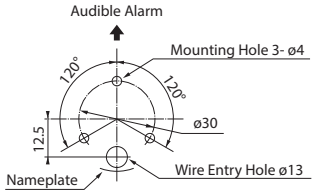

(Unit: mm)

Specifications

Stack Number	Model	Rated Voltage	Power Consumption	Mass (FB)P	Mass (FB)W
1 Tier	LE-101	AC/DC 12V	1.1W	640g	260g
	LE-102	AC/DC 24V	1.6W		
	LE-110	AC 100V	5.7W	780g	400g
	LE-120	AC 220V			
2 Tiers	LE-201	AC/DC 12V	1.7W	690g	310g
	LE-202	AC/DC 24V	2.2W		
	LE-210	AC 100V	6.7W	830g	450g
	LE-220	AC 220V			
3 Tiers	LE-301	AC/DC 12V	2.2W	740g	360g
	LE-302	AC/DC 24V	2.7W		
	LE-310	AC 100V	7.5W	880g	500g
	LE-320	AC 220V			
4 Tiers	LE-401	AC/DC 12V	2.7W	790g	410g
	LE-402	AC/DC 24V	3.2W		
	LE-410	AC 100V	8.3W	930g	550g
	LE-420	AC 220V			
5 Tiers	LE-501	AC/DC 12V	3.2W	840g	460g
	LE-502	AC/DC 24V	3.7W		
	LE-510	AC 100V	9.1W	980g	600g
	LE-520	AC 220V			

Wiring

LE Model

- AC/DC 24V Lighting Type

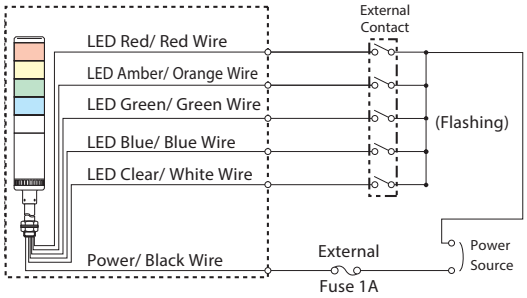

- DC 24V NPN Type

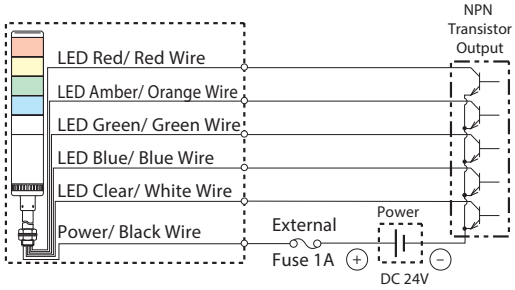

- DC 24V PNP Type

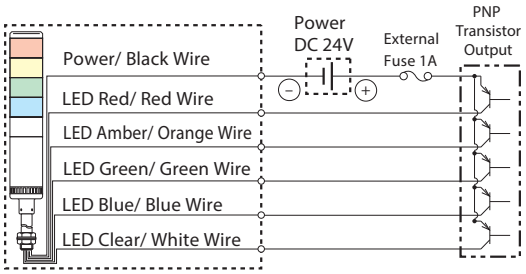

- AC/DC 24V Lighting/Flashing Type

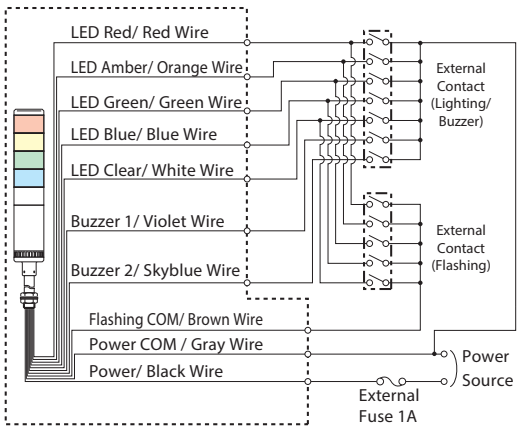

LE Model

- DC 24V NPN FB Type

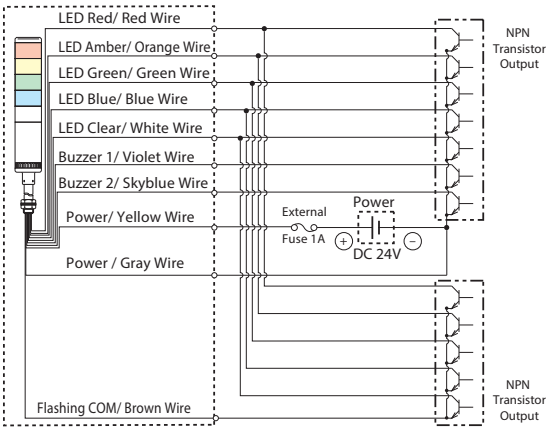

- DC 24V PNP FB Type

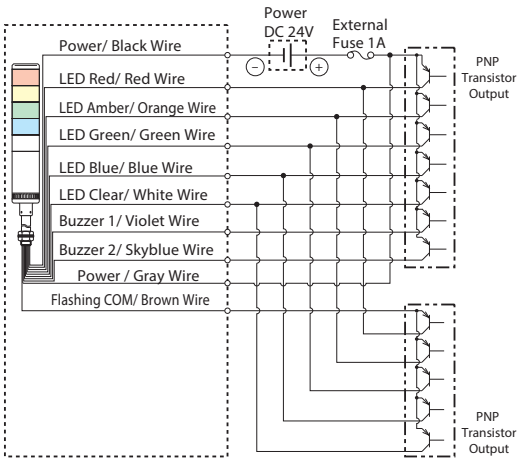

Signal Line Voltage and Current per LED Module

Voltage Type	Signal Line Voltage	LED			Alarm	
		Signal Line Current			Signal Line Current	Inrush Current
		R, Y	G, C	B		
AC/DC 12V	AC/DC12V	50mA	40mA	44mA	40mA	150mA
AC/DC24V	AC/DC 24V	25mA	20mA	22mA		
AC 100V, 220V	DC 24V	25mA	20mA	22mA		

Lead-wire color coordination table

LED Unit Color	Lead Wire Color
Red	Red
Amber	Orange
Green	Green
Blue	Blue
Clear/White	White

Alarm Sounds	Lead Wire Color
Buzzer 1	Purple
Buzzer 2	Skyblue

- AC Power Lighting Type

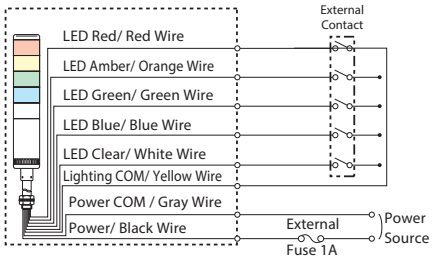

- AC Power Lighting/Flashing Type

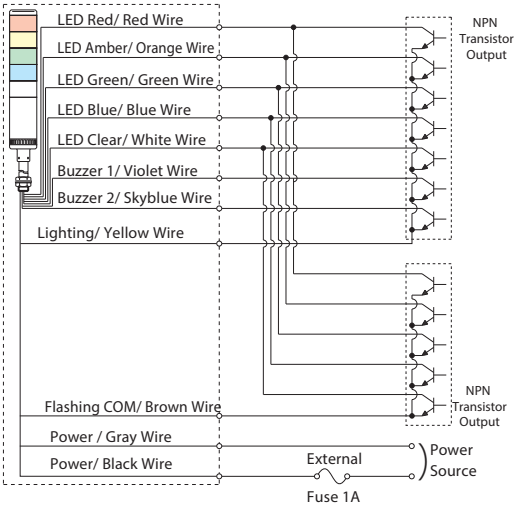

- AC Power NPN Type

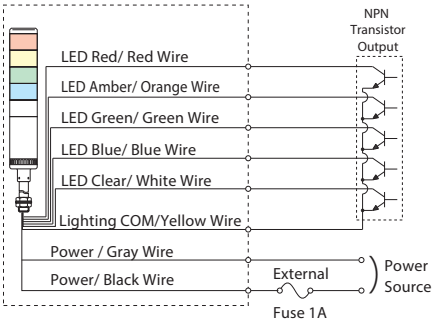

- AC Power NPN FB Type

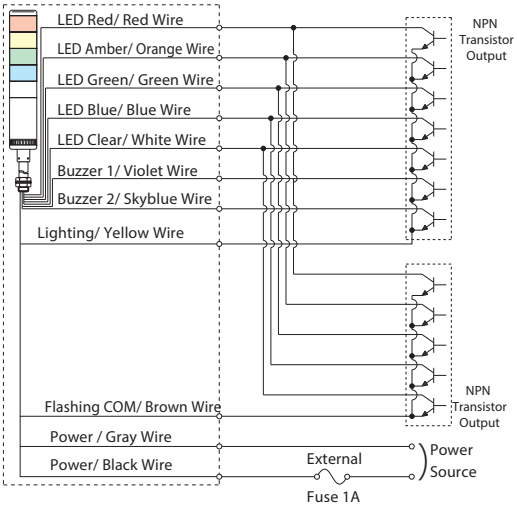

LU5

Signal Tower

LED

2 Alarm Sounds

85dB at 1m

IP65

Φ50

NPN/PNP Open-collector

Versatile modular Signal Tower featuring easy assembly and wiring designed for every need.

FEATURES

- PATLITE's exclusive hybrid prism-cut lens designed for enhanced visibility from any direction and distance.
- Two built-in alarms (FB Type) with selectable sound patterns.
- Maximum volume of up to 85dB (at 1m).
- Direct or pole* mount installation.
- Color-coordinated Terminal block corresponding to the lens colors for quick wiring and verification.
- Interchangeable LED Modules requires no re-wiring, even after installation.
- Lens is made of superior impact and heat resistant polycarbonate resin for superior durability and light transmission.
- Available Colors are in Red, Amber, Green, Blue, and Clear/White.

AVAILABLE BY SPECIAL ORDER

- Modules of the same color can be modified to operate from different terminals.

* Optional part sold separately.

How to Order

LED Module

LU5-E-R

- LED Unit
- Color
  - R: Red
  - Y: Amber
  - G: Green
  - B: Blue
  - C: White/Clear

Base Unit

LU5-02UFB

- Rated Voltage
  - 02: DC 24V
- Base Color
  - Blank: Ivory White
  - U : Silver
  - K : Black
- Type
  - Blank: Continuous Light
  - FB : Flashing/ Alarm

Specifications (Module)

Module Color	Model	Rated Voltage	Operating Voltage Range	Current/ Power Consumption	Mass
RED	LU5-E-R	DC 24V	21.6V - 26.4V	52mA/1.25W	44g
AMBER	LU5-E-Y				
GREEN	LU5-E-G			42mA/1.25W	
BLUE	LU5-E-B				
CLEAR	LU5-E-C				

Specifications (Base)

Model	Options	Rated Voltage	Operating Voltage Range	Open Collector	Mass
LU5-02	Continuous	DC 24V	21.6V - 26.4V	NPN/PNP	182g
LU5-02FB	2 Sounds/Flash				200g

Dimensions

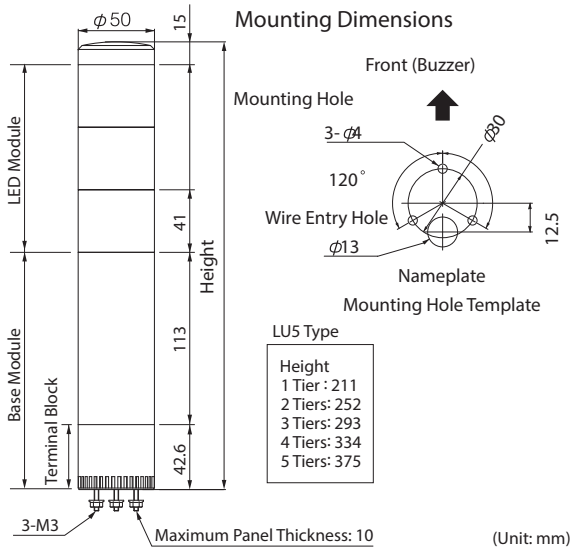

(Unit: mm)

Wiring

- DC 24V NPN Type

[CN2]

Terminal No.	Terminal Color
1	Red
2	Amber
3	Green
4	Blue
5	White
6	Gray
7	Black
8	Yellow
9	Grey
10	Black

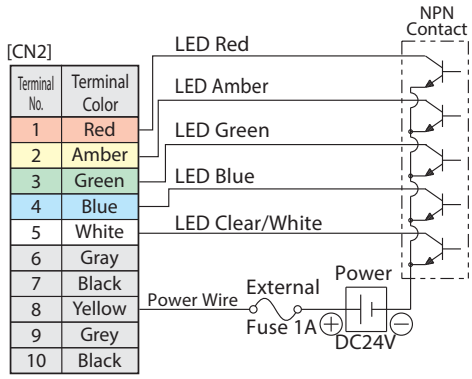

- DC 24V NPN FB Type

[CN2]

Terminal No.	Terminal Color
1	Red
2	Amber
3	Green
4	Blue
5	White
6	Gray
7	Black
8	Yellow
9	Grey
10	Black

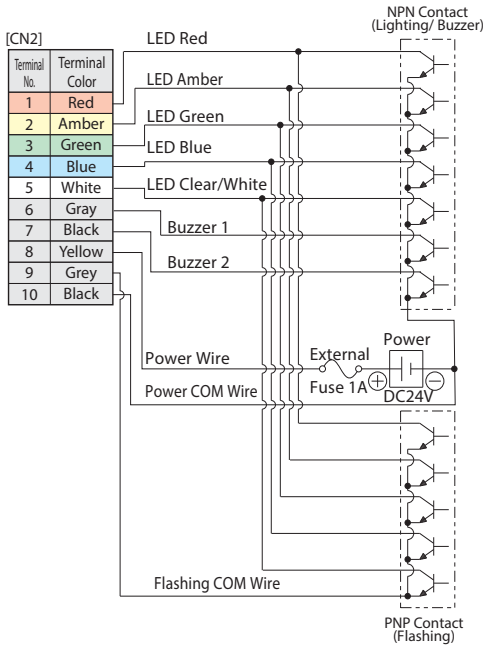

- AC/DC 24V Lighting Type

[CN2]

Terminal No.	Terminal Color	Module/Operation
1	Red	Red LED Module
2	Amber	Amber LED Module
3	Green	Green LED Module
4	Blue	Blue LED Module
5	White	White LED Module
6	Gray	
7	Black	
8	Yellow	Power/Lighting COM
9	Grey	
10	Black	

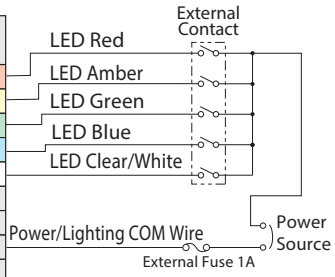

- AC/DC 24V Lighting/Flashing Type

[CN2]

Terminal No.	Terminal Color	Module/Operation
1	Red	Red LED Module
2	Amber	Amber LED Module
3	Green	Green LED Module
4	Blue	Blue LED Module
5	White	White LED Module
6	Gray	Buzzer 1
7	Black	Buzzer 2
8	Yellow	Power
9	Grey	Flashing COM
10	Black	Power/ Flashing COM

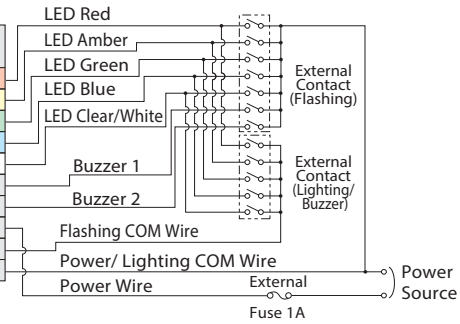

- DC 24V PNP Type

[CN2]

Terminal No.	Terminal Color
1	Red
2	Amber
3	Green
4	Blue
5	White
6	Gray
7	Black
8	Yellow
9	Grey
10	Black

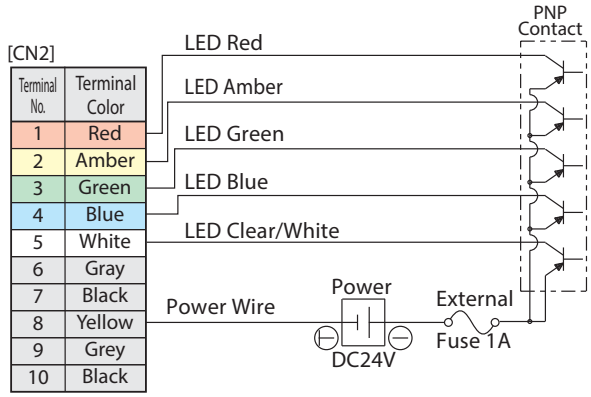

- DC 24V PNP FB Type

[CN2]

Terminal No.	Terminal Color
1	Red
2	Amber
3	Green
4	Blue
5	White
6	Gray
7	Black
8	Yellow
9	Grey
10	Black

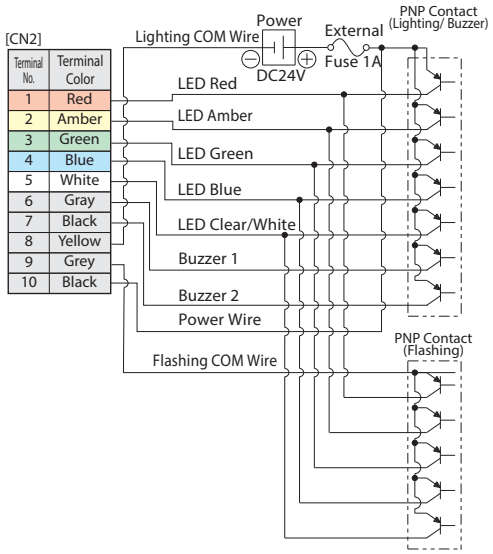

External Contact Capacity

Specifications		24V DC
LED Unit (1 Unit)	Current Consumption	Red,Amber: 52mA Green,Blue,White/Clear: 42mA
	Contact Capacity	Is≥100mA, Vs≥35V AC
Buzzer	Current Consumption	50mA
	Inrush Current	100mA
	Contact Capacity	Is≥100mA, Vs≥35V AC
Power Supply	Current Consumption	360mA
	Contact Capacity	Is≥500mA, Vs≥35V AC
External Contact Fuse		
Voltage		Fuse Amperage Rating
All Models		250V, 1A

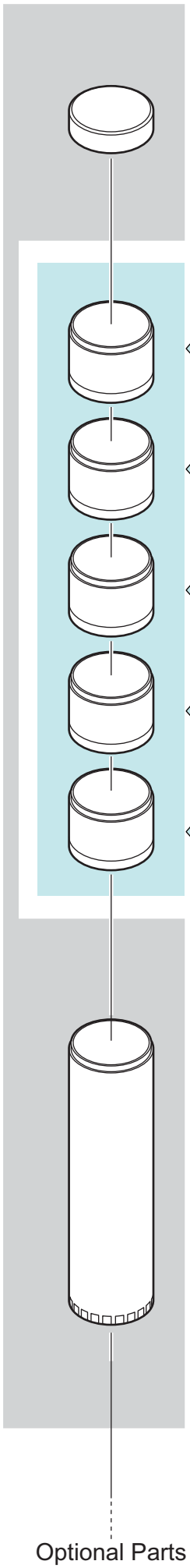

LED Units

Model	LU5-E-R	LU5-E-Y	LU5-E-G	LU5-E-B	LU5-E-C
Unit Color					
Rated Voltage	DC 24V				
Operating Voltage Range	DC 21.6 ~ 26.4V				
Current/Power Consumption	52mA/1.25W		42mA/1.0W		
Operating Temperature Range	-30℃ ~ +60℃				
Mass (±10%)	44g				

RED AMBER GREEN BLUE CLEAR/WHITE

BASE Units

Model	LU5-02	LU5-02FB	
Color			
Body Style	Standard		
Rated Voltage	DC 24V		
Operating Voltage Range	DC 21.6 ~ 26.4V		
Alarm		*Buzzer 1	*Buzzer 2
Current Consumption		50±10mA	24±10mA
Power Cunsumption		1.2±0.25W	0.58±0.25W
Sound Level		Max:85±5dB (at 1m)	
Flashing Cycle		60±12 flashes per minutes	
Operating Temperature Range	-30℃ ~ +60℃		
Mounting Direction	Upright, indoor only		
Protection Rating	IP65		
Mass (±10%)	182g	200g	
Open Collector	PNP/NPN		

* Buzzer 1 : Continuous Sound **Buzzer 2 : Intermittent Sound

Ivory White Silver Color (U) Black Color (K)

Optional Parts

Optional Parts

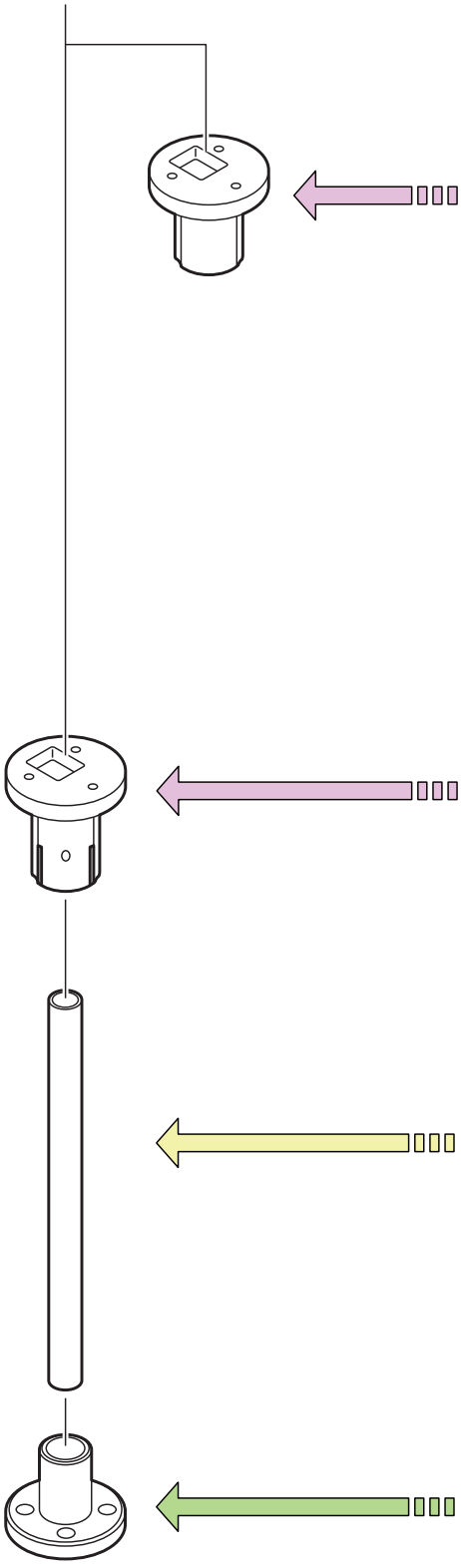

Upper Bracket

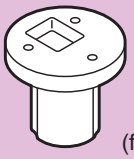

SZ-60NPT
(for 1/2" NPT Pole)

Upper Bracket

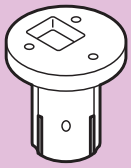

SZ-60-U

Pole

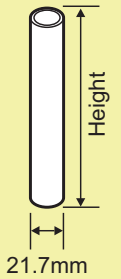

Steel Pole

Model	POLE-800S21	POLE-300S21	POLE-100S21
Height	800mm	300mm	100mm

Aluminum Pole

Model	POLE-800A21	POLE-300A21	POLE-100A21
Height	800mm	300mm	100mm

Mounting Bracket

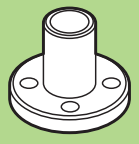

SZ-016A
(For φ21.7mm Pole)

SZ-70-B
(For φ21.7mm Aluminum Pole Only)

Wall Mount Bracket

SZ-020
(For φ21.7mm Pole)

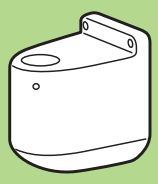

SZ-017
(For φ21.7mm Pole)

LMS

Signal Tower

LED

IP65

Φ60

NPN/PNP Open-collector

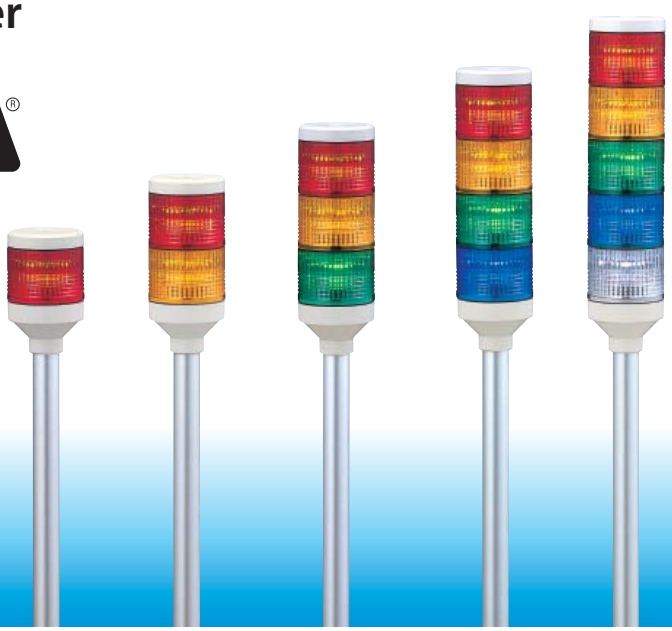

When ordering the clear-lens Signal Tower type, be sure to add "-Z" at the end of the part number when ordering

Versatile, cost and energy efficient LED Signal Tower for every need.

Reflection System

High visibility from any angle

FEATURES

- PATLITE's exclusive hybrid prism-cut lens designed for enhanced visibility from any direction and distance.
- Original Dual Reflection System for enhanced light diffusion; creating bright, distinctive illumination while saving energy.
- Pole-mount installation.
- Interchangeable Modules need no re-wiring, even after installation.
- Main body is constructed of ABS resin with superior resistance to impact and heat.
- Lens is made of superior impact resistant and light translucent AS resin.
- Available colors are in Red, Amber, Green, Blue, and Clear/White.
- Has the CE mark and conforms to the requirements for the EC directive.
- Is a UL Recognized Component (File No. E215660)

AVAILABLE BY SPECIAL ORDER

- Model LMS-U: Silver Color Body (FB060 type).

Easy to add and remove

- When adding or removing modules, the center shaft that matches the amount of tiers has to be purchased.

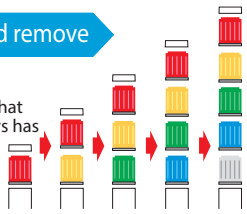

Interchangeable LED Modules

Changeable color sequence: Easy to add/ remove up to 5 colored modules even after installation.

Note: LED modules of the same color within a signal tower will light up simultaneously.

Wiring doesn't change

- The LED Module colors correspond to the wiring, so re-wiring is not necessary.

How to Order

LMS-502L- RYGBC-Z

- Tiers: 1~5
- Rated Voltage: 02: AC/DC 24V
- Mounting: Blank: Pole with Circular Mounting Bracket; K: SZ-020 Pole Mount; L: SZ-013 Pole Mount
- LED Color: R: Red; Y: Amber; G: Green; B: Blue; C: Clear/White (Top to bottom)
- Lens Color: Blank: Colored Lens; Z: Clear Lens

Dimensions

LMS

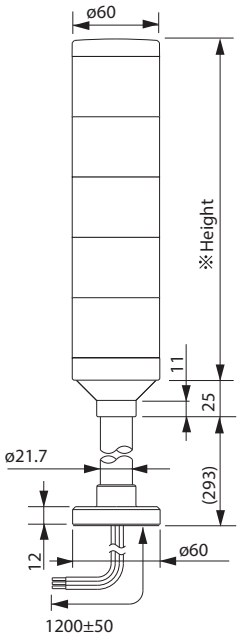

LMS Type
※Height
1 Tier: 69.2
2 Tiers: 110.4
3 Tiers: 151.6
4 Tiers: 192.8
5 Tiers: 234.0

LMS-K

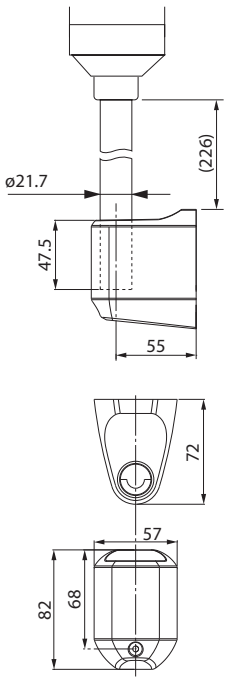

LMS-L

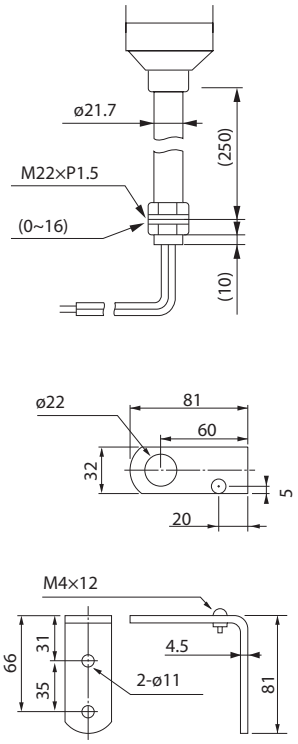

Mounting Dimensions (LMS)

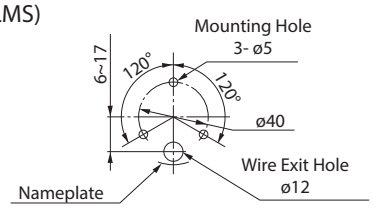

Mounting Dimensions (LMS-K)

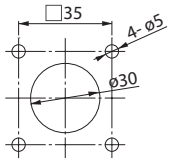

(Unit: mm)

Wiring

- DC 24V NPN Type

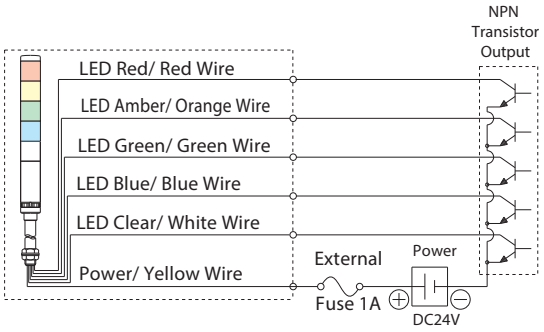

- AC/DC 24V Lighting Type

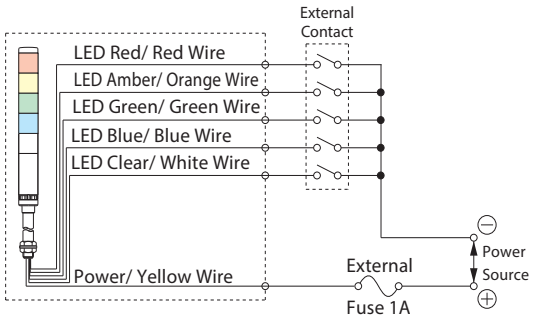

- DC 24V NPN FB Type

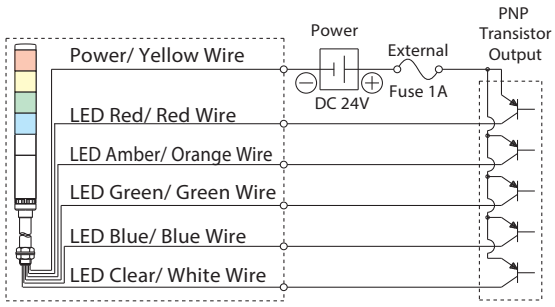

Specifications

Stack Number	Model	Rated Voltage	Power Consumption	Mass		
				LMS	LMS-L	LMS-K
1 Tier	LMS-102	AC/DC 24V	1.2W	290g	620g	420g
2 Tiers	LMS-202		2.4W	340g	670g	480g
3 Tiers	LMS-302		2.8W	390g	720g	540g
4 Tiers	LMS-402		3.2W	440g	770g	600g
5 Tiers	LMS-502		3.6W	490g	820g	660g

LME/LME-U/LME-N

Signal Tower

RoHS

LED

2 Alarm Sounds (FB Type)

90dB at 1m (FB Type)

IP65 (FB, L, K: IP54)

Φ60

Cable (LME-U)

NPN/PNP Open-collector

When ordering the clear-lens Signal Tower type, be sure to add "-Z" at the end of the part number when ordering

Versatile, cost and energy efficient LED Signal Tower for every need.

High visibility from any angle

Adjustable Volume (Max. 85dB at 1m)

Dual Reflection System

PATLITE's original dual reflection system with its exclusive hybrid prism-cut lens and 5 color LED modules creates a bright, distinctive and even illumination.

FEATURES

- PATLITE's exclusive hybrid prism-cut lens designed for enhanced visibility from any direction and distance.
- Original Dual Reflection System for enhanced light diffusion; creating bright, distinctive illumination while saving energy.
- Two built-in alarms (FB Type) with selectable sound patterns.
- Adjustable volume of up to 90dB (at 1m).
- Direct or pole mount installation.
- Interchangeable Modules need no re-wiring, even after installation.
- Main body is constructed of ABS resin with superior resistance to impact and heat. (U type has silver body and 3m cable)
- Lens is made of superior impact resistant and light translucent AS resin.
- NPN/PNP Compatible (Except 120/220V AC LME-U, compatible with NPN only).
- Available colors are in Red, Amber, Green, Blue, and Clear/White.
- Conforms to the CE requirements (for 24V type only).
- UL Recognized Components (File No. E215660; for 24V, 120V, 230V type only)

Easy to add and remove

- When adding or removing modules, the center shaft that matches the amount of tiers has to be purchased.

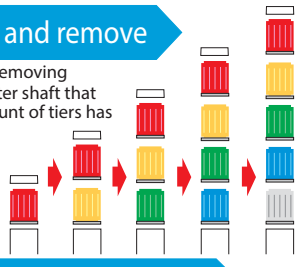

Interchangeable LED Modules

Changeable color sequence: Easy to add/ remove up to 5 colored modules even after installation.

Note: LED modules of the same color within a signal tower will light up simultaneously.

Wiring doesn't change

- The LED Module colors correspond to the wiring, so re-wiring is not necessary.

How to Order

LME-502UFBW-RYGBC-Z

- Tiers: 1~5
- Rated Voltage: 02: AC/DC 24V; 10: AC 100V; 12: AC 120V; 20: AC 220V; 23: AC 230V
- Body Color: Blank: Ivory White; N: Black; U: Silver
- Type: Blank: Continuous Light; FB: Flashing/ Alarm
- Mounting: Blank: Pole Mount with circular mounting bracket; K: SZ-020 Pole Mount; L: SZ-013 Pole Mount; W: Direct Mount
- LED Color: R: Red; Y: Amber; G: Green; B: Blue; C: Clear/White (Top to bottom)
- Lens Color: Blank: Colored Lens; Z: Clear Lens

Dimensions

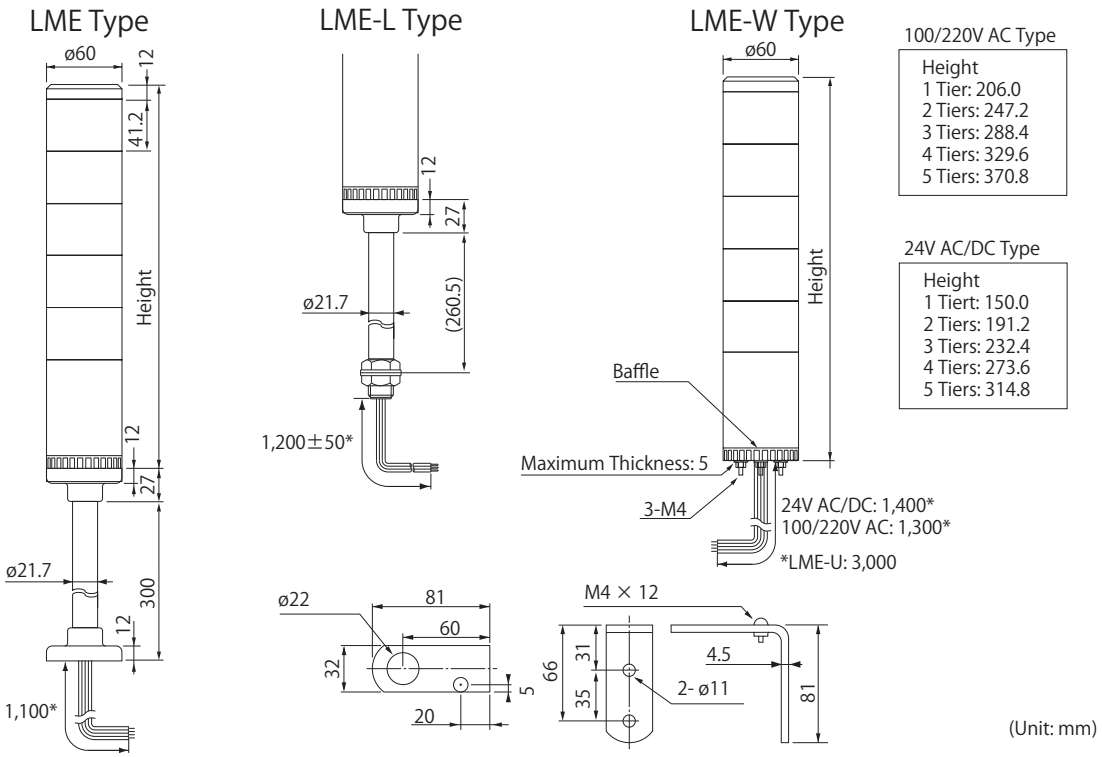

100/220V AC Type

Height
1 Tier: 206.0
2 Tiers: 247.2
3 Tiers: 288.4
4 Tiers: 329.6
5 Tiers: 370.8

24V AC/DC Type

Height
1 Tiert: 150.0
2 Tiers: 191.2
3 Tiers: 232.4
4 Tiers: 273.6
5 Tiers: 314.8

(Unit: mm)

Specifications

Stack Number	Model	Rated Voltage	Power Consumption	Mass		
				LME	LME-L	LME-W
1 Tier	LME-102	AC/DC 24V	2.2W	0.43kg	0.73kg	0.27kg
	LME-110	AC 100V	5.1W	0.68kg	1.06kg	0.52kg
	LME-112	AC 120V				
	LME-120	AC 220V			—	
	LME-123	AC 230V				
2 Tiers	LME-202	AC/DC 24V	3.4W	0.48kg	0.78kg	0.32kg
	LME-210	AC 100V	7.1W	0.73kg	1.10kg	0.57kg
	LME-212	AC 120V				
	LME-220	AC 220V			—	
	LME-223	AC 230V				
3 Tiers	LME-302	AC/DC 24V	3.8W	0.53kg	0.83kg	0.37kg
	LME-310	AC 100V	7.9W	0.78kg	1.14kg	0.62kg
	LME-312	AC 120V				
	LME-320	AC 220V			—	
	LME-323	AC 230V				
4 Tiers	LME-402	AC/DC 24V	4.2W	0.58kg	0.88kg	0.42kg
	LME-410	AC 100V	8.7W	0.83kg	1.18kg	0.67kg
	LME-412	AC 120V				
	LME-420	AC 220V			—	
	LME-423	AC 230V				
5 Tiers	LME-502	AC/DC 24V	4.6W	0.63kg	0.93kg	0.47kg
	LME-510	AC 100V	9.5W	0.86kg	1.22kg	0.72kg
	LME-512	AC 120V				
	LME-520	AC 220V			—	
	LME-523	AC 230V				

Lead-wire color coordination table

LED Unit Color	Lead Wire Color
Red	Red
Amber	Orange
Green	Green
Blue	Blue
Clear/White	White

Alarm Sounds	Lead Wire Color
Buzzer 1	Purple
Buzzer 2	Skyblue

Signal Line voltage and current per LED Module

Rated Voltage	Signal Line Voltage	LED		Alarm	
		Signal Line Current		Signal Line Current	Inrush Current
		R, Y	G, B, C		
AC/DC 24V	AC/DC 24V	50mA	20mA	40mA	250mA
AC 100V	DC 24V				
AC 200V					

Wiring

- AC/DC 24V Lighting Type

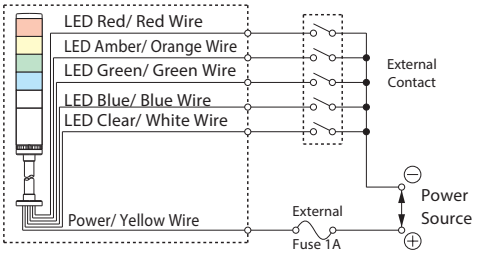

- AC Power Lighting Type

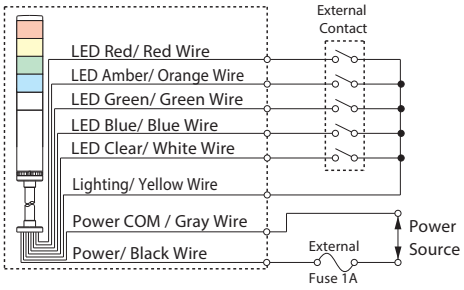

- AC/DC 24V Lighting/Flashing Type

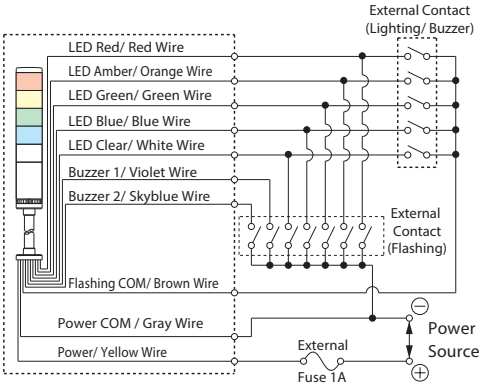

- AC Power Lighting/Flashing Type

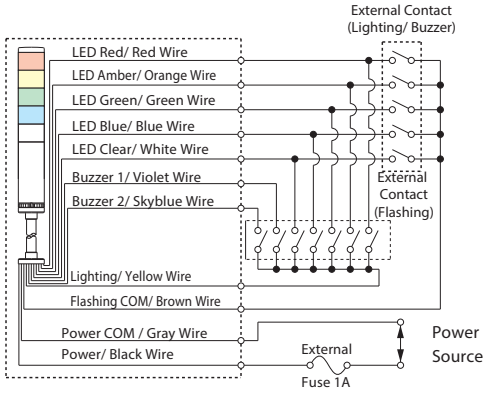

- DC 24V NPN FB Type

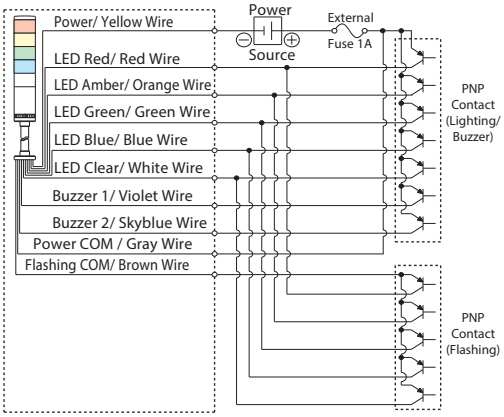

- AC Power NPN Type

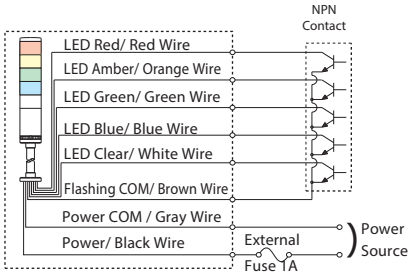

- AC Power NPN FB Type

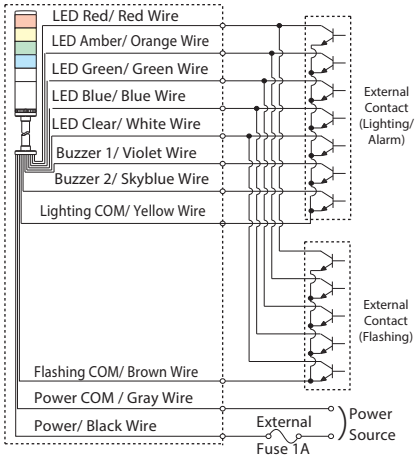

- DC 24V NPN Type

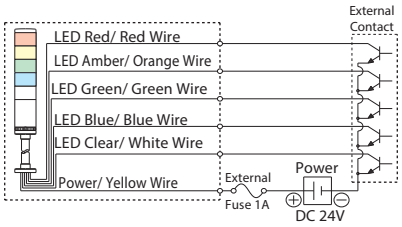

- DC 24V PNP Type

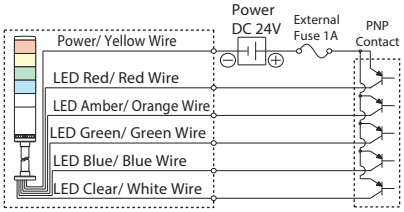

- DC 24V PNP FB Type

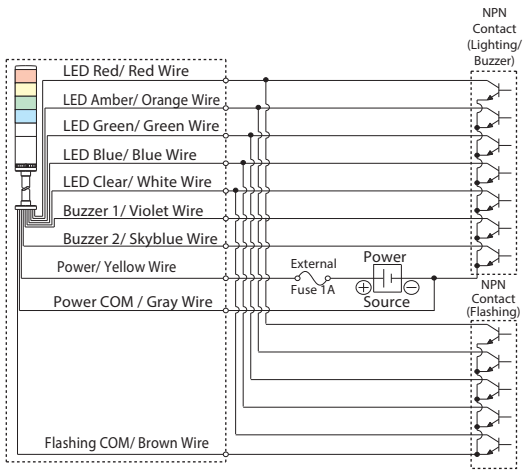

MEMO

For more details, visit our website at http://www.patlite.com

LME-S/LME-Q

Signal Tower

RoHS

LED

2 Alarm Sounds (FB Type)

90dB at 1m (FB Type)

IP65

Φ60

Cable

NPN Open-collector

Space-saving, multi-color single-tier LED Signal Tower.

High visibility from any angle | Adjustable Volume (Max. 85dB at 1m)

Dual Reflection System

PATLITE's original dual reflection system with its exclusive hybrid prism-cut lens and 5 color LED modules creates a bright, distinctive and even illumination.

FEATURES

- PATLITE's exclusive hybrid prism-cut lens designed for enhanced visibility from any direction and distance.
- Original Dual Reflection System for enhanced light diffusion; creating bright, distinctive illumination while saving energy.
- Two built-in alarms (FB Type) with selectable sound patterns.
- Adjustable volume of up to 90dB (at 1m).
- Direct or pole mount installation.
- Interchangeable Modules need no re-wiring, even after installation.
- PATLITE's single-tiered triple or quadruple colored unit is ideal for applications with limited vertical space.
- Pole-mount installation includes a circular mounting base as standard equipment.
- See "Color Coordination Combination" Section for available colors.

MODEL LME-S AVAILABLE BY SPECIAL ORDER

- Rated Voltage: AC/DC 24V only.
- Body: Silver Color
- Cable: Versatile and flexible 3m cable.
- PNP compatible

How to Order

LME-102UFBW-S1

- Rated Voltage
  - 02: DC 24V
  - 10: AC 100V
  - 12: AC 120V
  - 20: AC 220V
  - 23: AC 230V
- Body Color
  - Blank: Ivory White
  - U: Silver
- Type
  - Blank: Continuous light
  - FB: Flashing/ Alarm
- Mount
  - Blank: Pole Mount with circular mounting bracket
  - W: Direct Mount
- Color Combinations
  - S1: Red, Amber, Green
  - S4: Red, Green, Blue
  - S7: Amber, Green, Blue
  - Q1: Red, Amber, Green, Blue
  - Q2: Red, Amber, Green, Clear/White
  - Q4: Amber, Green, Blue, Clear/White

Specifications

Series	Stack Number	Model	Rated Voltage	Power Consumption	Mass	
					LME	LME-W
LME-S	1 Tier	LME-102	DC 24V	2.2W	430g	270g
		LME-110	AC 100V	5.1W	860g	520g
		LME-112	AC 120V			
		LME-120	AC 220V			
		LME-123	AC 230V			
LME-Q	1 Tier	LME-102	DC 24V	2.2W	430g	270g
		LME-110	AC 100V	5.1W	680g	520g
		LME-112	AC 120V			
		LME-120	AC 220V			
		LME-123	AC 230V			

Patlite's unique single-tier unit with triple or quadruple colors integrated.

S1: Red, Amber, Green

Q1: Red, Amber, Green, Blue

S4: Red, Green, Blue

Q1: Red, Amber, Green, Clear/White

S7: Amber, Green, Blue

Q1: Amber, Green, Blue, Clear/White

Clear Lens

Patlite's new single-tier, multi-color unit is ideally suited for installations requiring a multiple color display but has limited vertical space. The clear lenses are easily distinguishable between lit and unlit lamps, and the unlit look can integrate visually with the equipment it is attached to.

Dimensions

LME Type

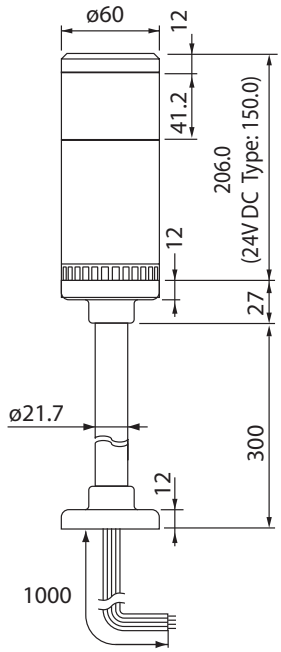

LME-W Type

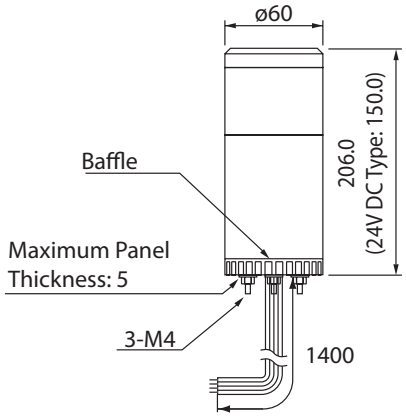

Mounting Dimensions (LME-W)

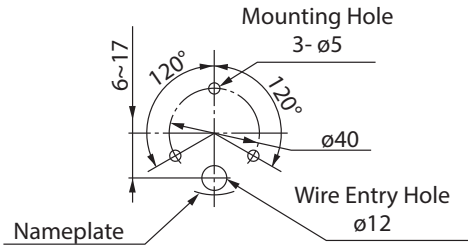

(Unit: mm)

Wiring

- DC 24V Lighting Type

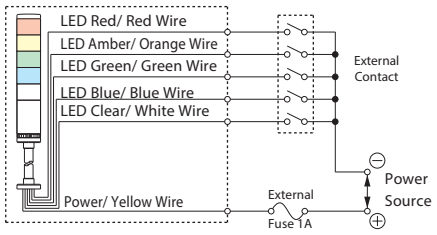

- DC 24V NPN Type

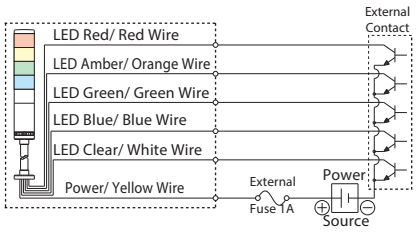

- AC Power Lighting Type

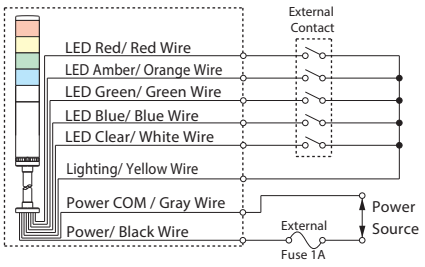

- DC 24V Lighting/Flashing Type

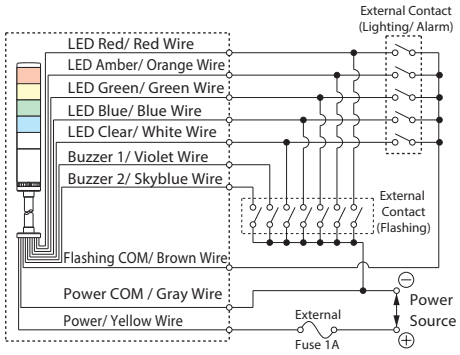

- AC Power NPN Type

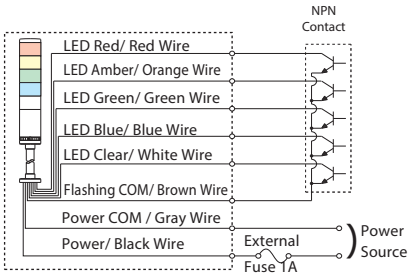

- AC Power Lighting/Flashing Type

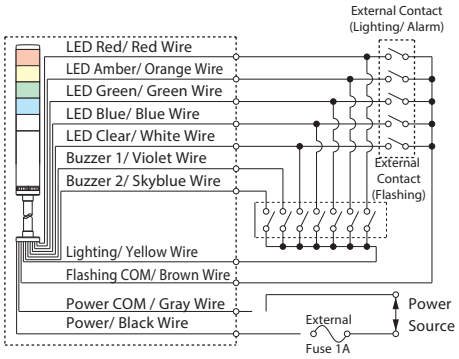

- DC 24V NPN FB Type

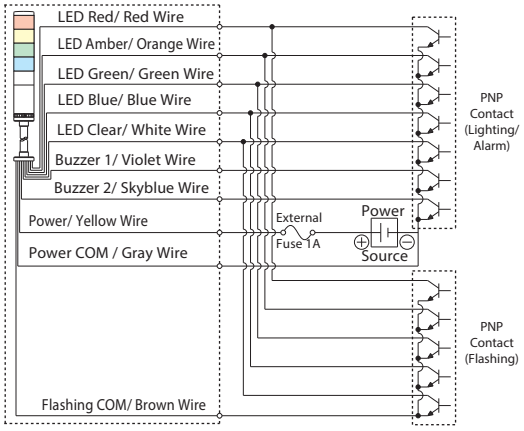

- AC Power NPN FB Type

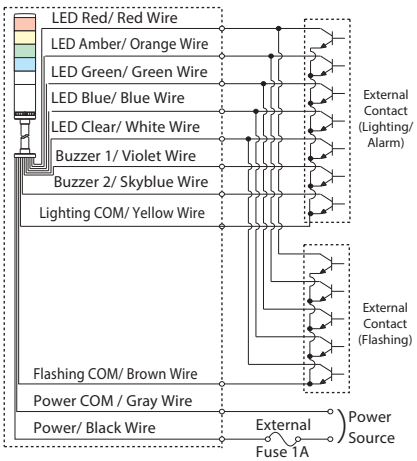

LME-S/Q Lead-wire Color Table

LED Unit Color		Lead Wire Color
S1	Red, Amber, Green	Red, Orange, Green
S4	Red, Green, Blue	Red, Green, Blue
S7	Amber, Green, Blue	Orange, Green, Blue
Q1	Red, Amber, Green, Blue	Red, Orange, Green, Blue
Q2	Red, Amber, Green, Clear/White	Red, Orange, Green, White
Q4	Amber, Green, Blue, Clear/White	Orange, Green, Blue, White

Signal Line voltage and current per LED Module

Rated Voltage	Signal Line Voltage	LED		Alarm	
		Signal Line Current		Signal Line Current	Inrush Current
		R, Y	G, B, C		
DC 24V	DC 24V	50mA	20mA	40mA	250mA
AC 100V	DC 24V				
AC 120V					
AC 200V					
AC 220V					
AC 230V					

Lead-wire color coordination table

LED Unit Color	Lead Wire Color
Red	Red
Amber	Orange
Green	Green
Blue	Blue
Clear/White	White

Alarm Sounds	Lead Wire Color
Buzzer 1	Purple
Buzzer 2	Skyblue

LHE-A

Signal Tower

RoHS

LED

2 Alarm Sounds (FB Type)

90dB at 1m (FB Type)

IP65 (FB Type:IP54)

Φ70

NPN/PNP Open-collector

Adjustable Volume (Max. 85dB at 1m)

The Signal Tower with a water resistant design for wet environments.

Dual Reflection System

PATLITE's original dual reflection system with its exclusive hybrid prism-cut lens and 5 color LED modules creates a bright, distinctive and even illumination.

FEATURES

- Original LED reflection system to improve brightness and provide maintenance-free operation.
- Two built-in alarms (FB type)
- Adjustable volume of up to 90dB (at 1m).
- Direct mount installation is standard; pole-mount is available with the optional mounting pole.
- Interchangeable Modules need no re-wiring, even after installation.
- Lens is made of superior impact and heat resistant AS resin for superior durability and light transmission.
- Available colors are in Red, Amber, Green, Blue, and Clear/White.
- Has the CE mark and conforms to the requirements for the EC directive. (for 24V type)
- Is a UL Recognized Component (File No. E215660, for 24V type only).

Easy to add and remove

- When adding or removing modules, the center shaft that matches the amount of tiers has to be purchased.

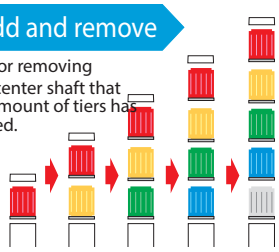

Interchangeable LED Modules

Changeable color sequence: Easy to add/ remove up to 5 colored modules even after installation.

Note: LED modules of the same color within a signal tower will light up simultaneously.

Wiring doesn't change

- The LED Module colors correspond to the wiring, so re-wiring is not necessary.

How to Order

LHE-502AFB-RYGBC

- Tiers: 1~5
- Rated Voltage: 02: AC/DC 24V; 10: AC 100V; 12: AC 120V; 20: AC 220V
- Type: Blank: Continuous light; FB: Flashing/ Alarm
- Color: R: Red; Y: Amber; G: Green; B: Blue; C: Clear/White (Top to bottom)

Dimensions

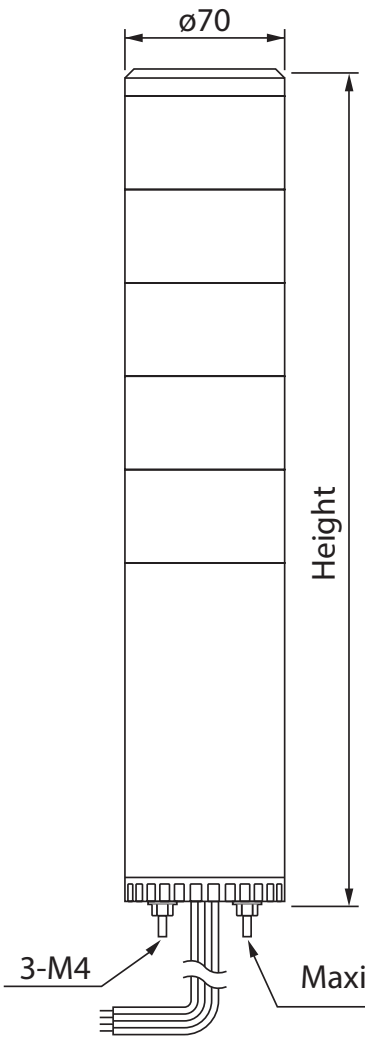

LHE Type

Height
1 Tier: 212
2 Tiers: 253
3 Tiers: 294
4 Tiers: 335
5 Tiers: 376

Mounting Dimensions

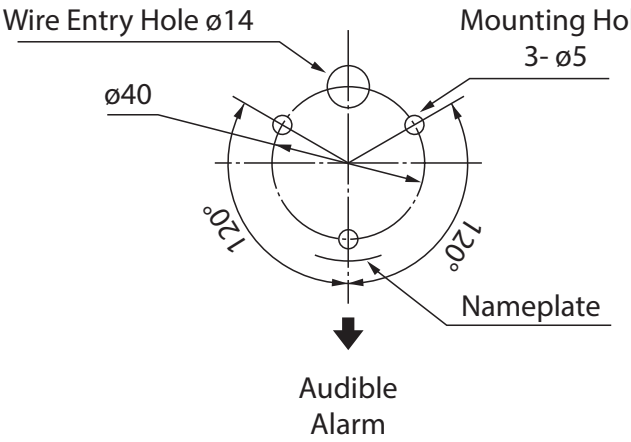

(Unit: mm)

"Super Bright" LED provides the Highest level of visibility.

RED

AMBER

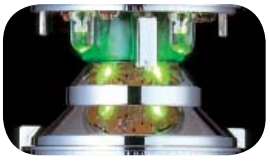
GREEN

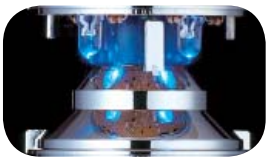
BLUE

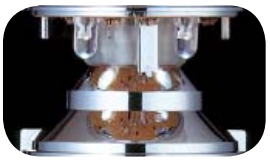
CLEAR/WHITE

Specifications

Stack Number	Model	Rated Voltage	Power Consumption	Mass
1 Tier	LHE -102A/AFB	AC/DC 24V	2.2W	400g
	LHE -110A/AFB	AC 100V	4.7W	650g
	LHE -112A/AFB	AC 120V		
	LHE -120A/AFB	AC 220V		
2 Tiers	LHE -202A/AFB	AC/DC 24V	3.4W	450g
	LHE -210A/AFB	AC 100V	6.4W	700g
	LHE -212A/AFB	AC 120V		
	LHE -220A/AFB	AC 220V		
3 Tiers	LHE -302A/AFB	AC/DC 24V	4.4W	500g
	LHE -310A/AFB	AC 100V	7.9W	750g
	LHE -312A/AFB	AC 120V		
	LHE -320A/AFB	AC 220V		
4 Tiers	LHE -402A/AFB	AC/DC 24V	5.4W	550g
	LHE -410A/AFB	AC 100V	9.4W	800g
	LHE -412A/AFB	AC 120V		
	LHE -420A/AFB	AC 220V		
5 Tiers	LHE -502A/AFB	AC/DC 24V	6.4W	600g
	LHE -510A/AFB	AC 100V	10.9W	850g
	LHE -512A/AFB	AC 120V		
	LHE -520A/AFB	AC 220V		

Wiring

- AC/DC 24V Lighting Type

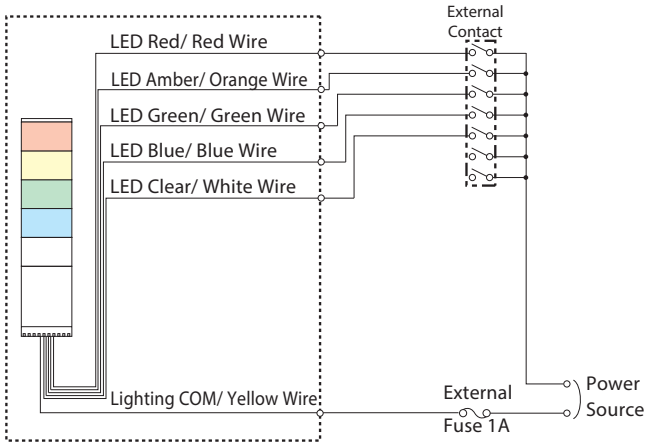

- AC Power Lighting Type

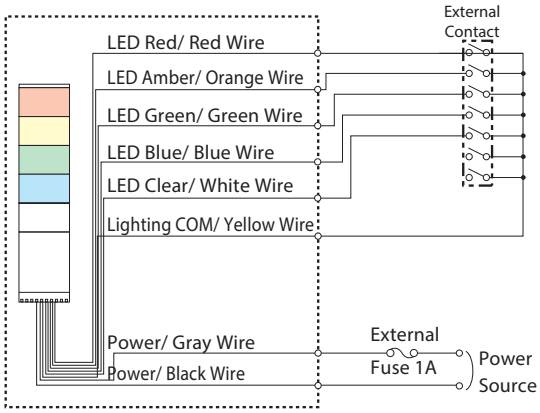

- AC/DC 24V Lighting/Flashing Type

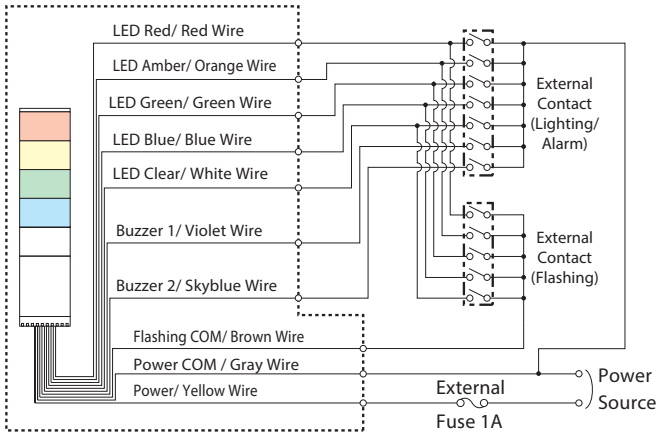

Signal Line voltage and current per LED Module

Rated Voltage	Signal Line Voltage	LED		Alarm	
		Signal Line Current		Signal Line Current	Inrush Current
		R, Y	G, C, B		
AC/DC 24V	AC/DC 24V	50mA	40mA	40mA	150mA
AC 100V	DC 24V	50mA	40mA		
AC 120V					
AC 220V					

- AC Power Lighting/Flashing Type

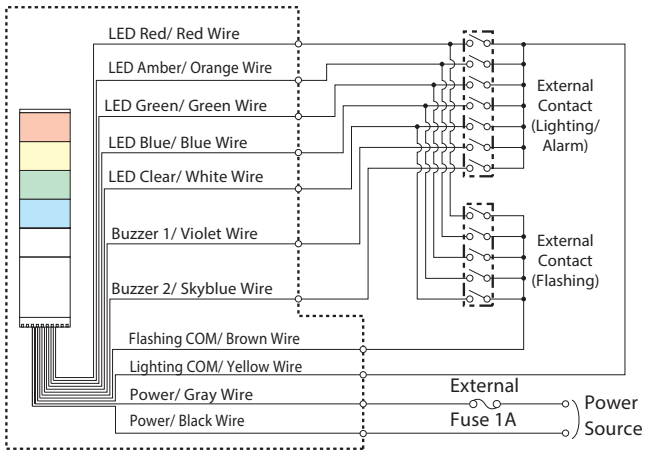

Lead-wire color coordination table

LED Unit Color	Lead Wire Color
Red	Red
Amber	Orange
Green	Green
Blue	Blue
Clear/White	White

Alarm Sounds	Lead Wire Color
Buzzer 1	Purple
Buzzer 2	Skyblue

LU7

Signal Tower

LED

2 Alarm Sounds (FB Type)

90dB at 1m (FB Type)

IP65

Φ70

NPN/PNP
Open-collector

Versatile modular Signal Tower featuring easy assembly and wiring designed for every need.

FEATURES

- PATLITE's exclusive hybrid prism-cut lens designed for enhanced visibility from any direction and distance.
- Two built-in alarms (FB type)
- Adjustable volume of up to 90dB (at 1m).
- Direct mount installation is standard; pole-mount is available with the optional mounting pole.
- Color-coordinated Terminal block corresponding to the lens colors for quick wiring and verification.
- Interchangeable LED Modules requires no re-wiring, even after installation.
- Lens is made of superior impact and heat resistant polycarbonate resin for superior durability and light transmission.
- Available Module Colors are in Red, Amber, Green, Blue, and Clear/White.
- Available Base colors are in Black, Silver and Ivory White.
- Conforms to the CE requirements (for 24V type).
- Is a UL Recognized Component (File No. E215660).
- Product Shipped in a modular style for customer's customized assembly.

How to Order

LED Module

LU7-E-R

- Model
- Unit
  - E : LED Unit
  - EX: Strobe Unit
- Color
  - R: Red
  - Y: Amber
  - G: Green
  - B: Blue
  - C: White/Clear

Base Unit

LU7-02SUFB

- Model
- Rated Voltage
  - 02: DC 24V
  - M2: AC 100 - 240V
- Body Size
  - Blank: Standard
  - S : Short
- Base Color
  - Blank: Ivory White
  - U : Silver
  - K : Black
- Type
  - Blank: Continuous light
  - FB: Flashing/ Alarm

THE LU7 Series Advantage

70mm diameter

Innovative LED Modular Style Signal Tower

Ultra-bright LEDs combined with an Innovative prism-cut lens design

With the innovative prism-cut lens, a small diameter can emit enough light to be seen from great distances while reducing costs of the Signal Tower.

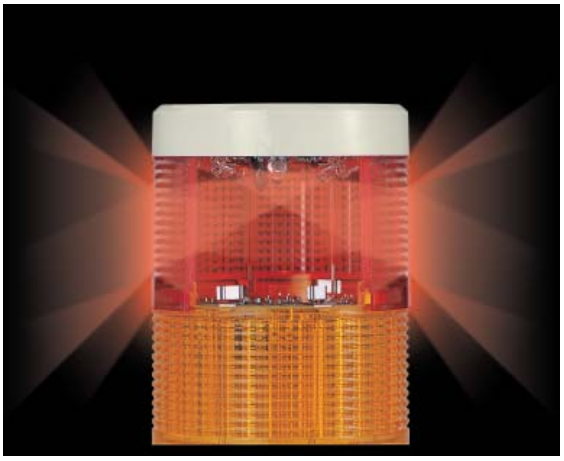

Ultra-bright LED

Two selectable alarms integrated in the Base Module

Adding sound to a visual signal enhances the critical nature of the status, bringing more attention to certain conditions while still allowing up to five LED modules to be used because the alarms are built into the base.

Delivers Sound of up to 90 dB (at 1m)

Alarm can be easily heard over ambient noises.

Modular Design

With a modular design, freely configuring and assembling a Signal Tower is easy and the modules can be put away for when the machine has to be shipped to reduce shipping costs and shipping crate material.

Modular Construction

Color-coded & spring-loaded Terminal Block

Easier wiring and more reliable in comparison to screw-type connections with each terminal block color corresponding to the LED module color.

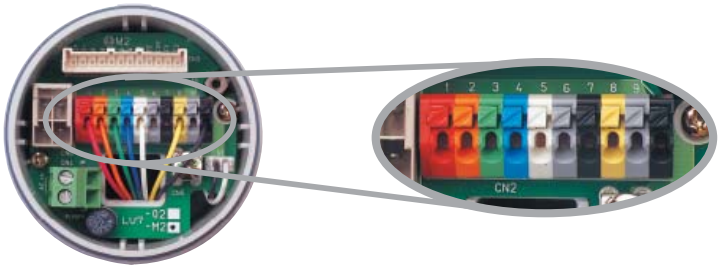

Wiring Terminals

O-rings

The O-rings seal the tower from liquids so that an IP-65 rating can be achieved to allow the tower to be used in wet environments.

IP65 Protection

IP65 & IP66 with Optional Cable Gland

The new LU7 is designed to add a cable gland so that a rating of IP-65 can be achieved to be used in harsher environments. (Cable Gland is to be supplied by the user.)

Specifications (Base)

LU7 Base Units

Model	LU7-02S	LU7-02	LU7-02FB		LU7-02M2	LU7-02M2FB	
Rated Voltage	DC 24V				AC 100 to 240V (50/60Hz)		
Operating Voltage Range	DC 21.6 - 26.4V				AC 90 to 250V (50/60Hz)		
Alarm	—		Buzzer 1*	Buzzer 2**	—	Buzzer 1*	Buzzer 2**
Current Consumption	—		50±10mA	24±10mA	—	50±10mA	24±10mA
Power Consumption	—		1.2±0.25W	0.58±0.25W	—	1.8±0.25W	1.3±0.25W
Sound Level	—		Max: 90±5dB (at 1m) Min: 70dB or less (at 1m)		—	Max: 90±5dB (at 1m) Min: 70dB or less (at 1m)	
Flash Cycle	—		60±12 flashes per minute		—	60±12 flashes per minute	
Operating Temperature Range	-30°C to +60°C				-25°C to +55°C		
Mounting Direction	Upright, Indoor Only						
Protection Rating	IP65 (IP66 with Cable Gland***)						
Mass (±10%)	150g	250g	280g		310g	340g	
Open Collector	PNP/NPN				NPN		

*Buzzer 1: Continuous **Buzzer 2: Intermittent ***Cable Gland to be supplied by user

Unit Color Variation

Short Body

Ivory White	Silver	Black
LU7-02S	LU7-02SU	LU7-02SK

Standard Body

LU7-02/M2	LU7-02U/M2U	LU7-02K/M2K

Specifications (Module)

LU7 LED Units*

Model	LU7-E-R	LU7-E-Y	LU7-E-G	LU7-E-B	LU7-E-C
Unit /LED Color	LED Unit Red	LED Unit Amber	LED Unit Green	LED Unit Blue	LED Unit White/Clear
Rated Voltage	DC 24V				
Operating Voltage Range	DC 21.6 - 26.4V				
Current/Power Consumption	52mA/1.25W		42mA/1.0W		
Operating Temperature Range	-30°C to +60°C				
Mass (±10%)	60g				

*Operates on LU7-02, LU7-02FB, LU7-M2 and LU7-M2FB Base Units

Dimensions

LU7
Standard Body

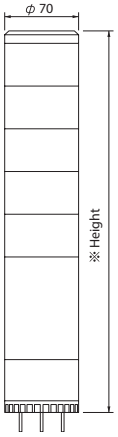

※ Height
1 Tier : 211
2 Tiers : 252
3 Tiers : 293
4 Tiers : 334
5 Tiers : 375

LU7-02S
Short Body

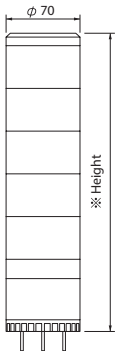

(Unit: mm)

※ Height
1 Tier : 118
2 Tiers : 159
3 Tiers : 200
4 Tiers : 241
5 Tiers : 282

Mounting Dimensions

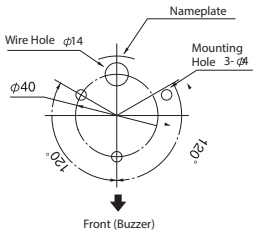

Wiring

External Contact Capacity

Specifications		DC 24V	AC 100 - 240V
LED Unit (1 Unit)	Current Consumption	Red,Amber: 52mA Green,Blue,White/Clear: 42mA	
	Contact Capacity	Is≥100mA, Vs≥AC 35V	
Alarm	Current Consumption	50mA	
	Inrush Current	100mA	
	Contact Capacity	Is≥100mA, Vs≥AC 35V	
Power Supply	Current Consumption	360mA	40mA (250VAC) - 110mA (90VAC)
	Contact Capacity	Is≥500mA Vs≥AC 35V	9A (90V) - 25A (250V) Vs≥AC 250V

External Contact Fuse

Voltage	Fuse Amperage Rating
All Models	250V, 1A

Wiring (cont.)

- AC/DC 24V Lighting Type

[CN2]

Terminal No.	Terminal Color	Module/Operation
1	Red	Red LED Module
2	Amber	Amber LED Module
3	Green	Green LED Module
4	Blue	Blue LED Module
5	White	White LED Module
6	Gray	
7	Black	
8	Yellow	Power/Lighting COM
9	Grey	
10	Black	

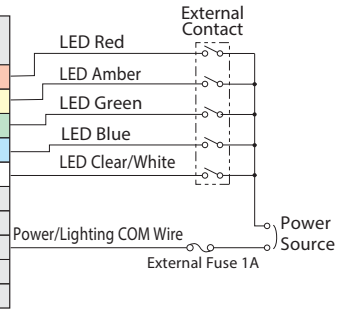

- AC Power Lighting Type

[CN2]

Terminal No.	Terminal Color	Module/Operation
1	Red	Red LED Module
2	Amber	Amber LED Module
3	Green	Green LED Module
4	Blue	Blue LED Module
5	White	White LED Module
6	Gray	
7	Black	
8	Yellow	Power/Lighting COM
9	Grey	
10	Black	

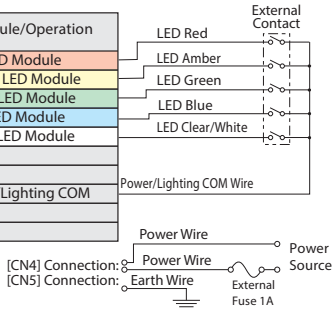

- AC/DC 24V Lighting/Flashing Type

[CN2]

Terminal No.	Terminal Color	Module/Operation
1	Red	Red LED Module
2	Amber	Amber LED Module
3	Green	Green LED Module
4	Blue	Blue LED Module
5	White	White LED Module
6	Gray	Buzzer 1
7	Black	Buzzer 2
8	Yellow	Power
9	Grey	Flashing COM
10	Black	Power/ Lighting COM

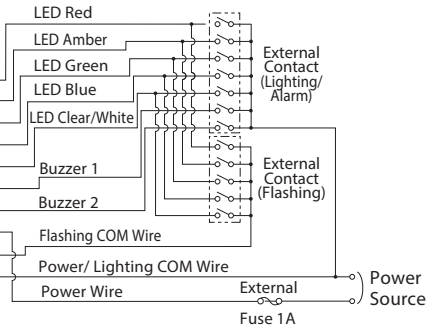

- AC Power Lighting/Flashing Type

[CN2]

Terminal No.	Terminal Color	Module/Operation
1	Red	Red LED Module
2	Amber	Amber LED Module
3	Green	Green LED Module
4	Blue	Blue LED Module
5	White	White LED Module
6	Gray	Buzzer 1
7	Black	Buzzer 2
8	Yellow	Lighting COM
9	Grey	Flashing COM
10	Black	

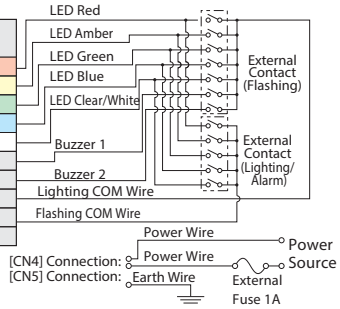

- DC 24V NPN Type

[CN2]

Terminal No.	Terminal Color
1	Red
2	Amber
3	Green
4	Blue
5	White
6	Gray
7	Black
8	Yellow
9	Grey
10	Black

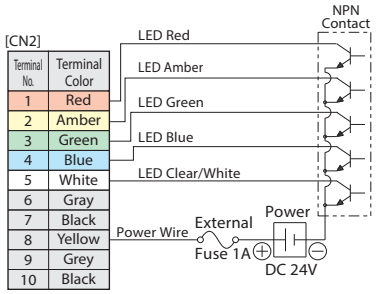

- DC 24V PNP Type

[CN2]

Terminal No.	Terminal Color
1	Red
2	Amber
3	Green
4	Blue
5	White
6	Gray
7	Black
8	Yellow
9	Grey
10	Black

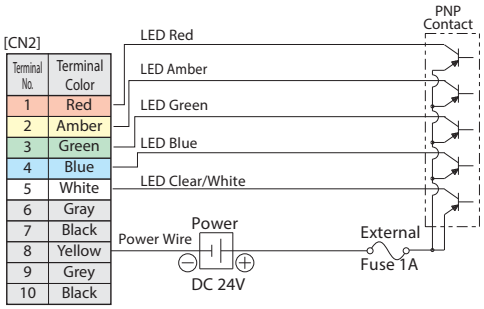

- AC Power NPN Type

[CN2]

Terminal No.	Terminal Color
1	Red
2	Amber
3	Green
4	Blue
5	White
6	Gray
7	Black
8	Yellow
9	Grey
10	Black

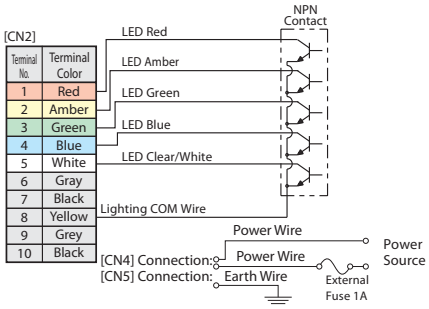

- DC 24V NPN FB Type

[CN2]

Terminal No.	Terminal Color
1	Red
2	Amber
3	Green
4	Blue
5	White
6	Gray
7	Black
8	Yellow
9	Grey
10	Black

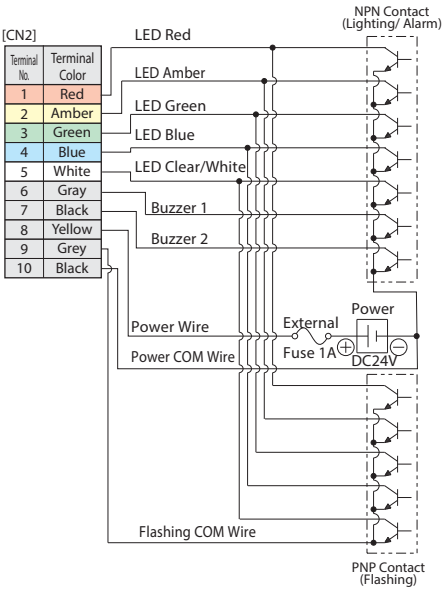

- DC 24V PNP FB Type

[CN2]

Terminal No.	Terminal Color
1	Red
2	Amber
3	Green
4	Blue
5	White
6	Gray
7	Black
8	Yellow
9	Grey
10	Black

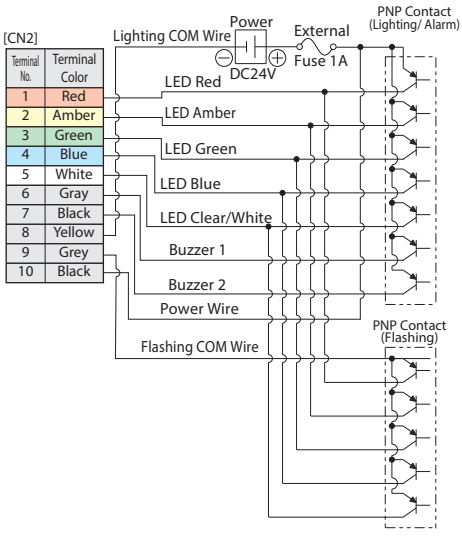

- AC Power NPN FB Type

[CN2]

Terminal No.	Terminal Color
1	Red
2	Amber
3	Green
4	Blue
5	White
6	Gray
7	Black
8	Yellow
9	Grey
10	Black

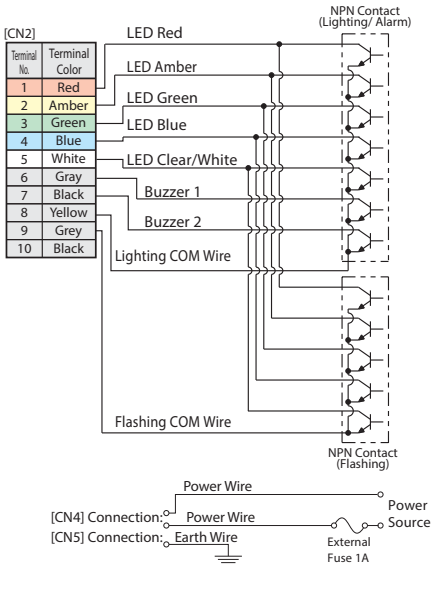

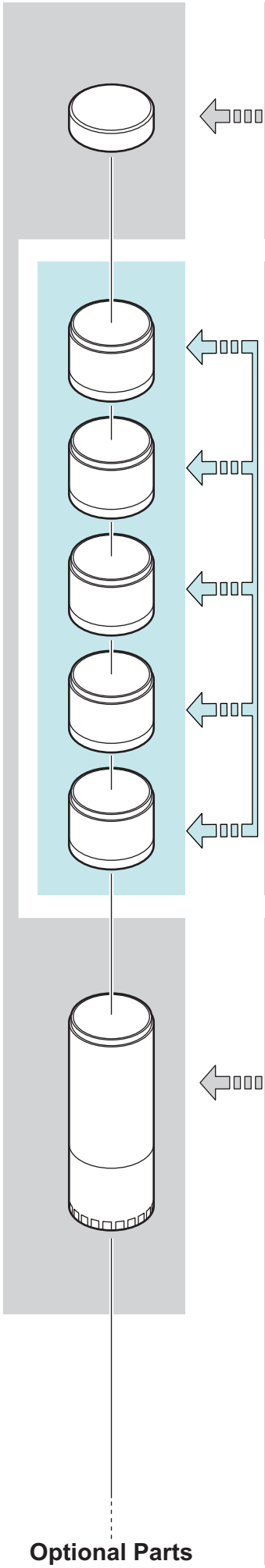

Voice and Sound Module

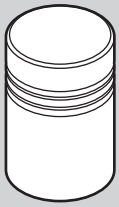

Model	LU7-V1
Type	Voice Synthesizer
Rated Voltage	DC 24V
Power Consumption	3.5W
Mass (±10%)	170g

LED Units

Model	LU7-E-R	LU7-E-Y	LU7-E-G	LU7-E-B	LU7-E-C
Unit Color	●	●	●	●	○
Rated Voltage	DC 24V				
Operating Voltage Range	DC 21.6 ~ 26.4V				
Current/Power Consumption	52mA/1.25W		42mA/1.0W		
Operating Temperature Range	-30℃ ~ +60℃				
Mass (±10%)	60g				

LED Strobe Module

Model	LU7-XE-R	LU7-XE-Y	LU7-XE-G	LU7-XE-B	LU7-XE-C
Unit Color	●	●	●	●	○
Rated Voltage	DC 24V				
Power Consumption	290mA	290mA	140mA	270mA	280mA
Mass (±10%)	70g				

● RED ● AMBER ● GREEN ● BLUE ○ CLEAR/WHITE

BASE Units

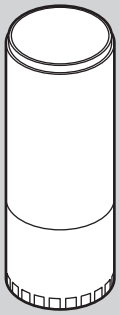

Standard Body

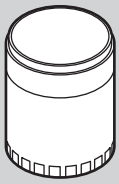

Short Body

Model	LU7-02S	LU7-02	LU7-02FB	LU7-M2	LU7-M2FB
Color	○ ● ●				
Standard Body/Short Body	Short	Standard		Standard	
Rated Voltage	DC 24V			AC 100～240V (50/60Hz)	
Operating Voltage Range	DC 21.6 ~ 26.4V			AC 90～250V (50/60Hz)	
Alarm	-	*Buzzer 1	*Buzzer 2	-	*Buzzer 1 / *Buzzer 2
Current Consumption	-	50±10mA	24±10mA	-	50±10mA / 24±10mA
Power Consumption	-	1.2±0.25W	0.58±0.25W	-	1.8±0.25W / 1.3±0.25W
Sound Level	-	Max:90±5dB (at 1m)		-	Max:90±5dB (at 1m)
		Min:70dB or Less (at 1m)			Min:70dB or Less (at 1m)
Flashing Cycle	-	60±12 flashes per minute		-	60±12 flashes per minute
Operating Temperature Range	-30℃ ~ +60℃			-25℃ ~ +55℃	
Mounting Direction	Upright, Indoor only			Upright, Indoor only	
Protection Rating	IP65 (IP66 with Cable Gland supplied by user)				
Mass (±10%)	150g	250g	280g	310g	340g
Open Collector Type	PNP/NPN			NPN	

* Buzzer 1 : Continuous Sound **Buzzer 2 : Intermittent Sound

○ Ivoly White ● Silver Color (U) ● Black (K)

Optional Parts

Optional Parts

Wall Mount Bracket

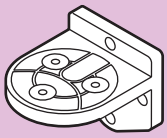

Model	SZ-018	SZ-018U	SZ-018K
Color	Ivory White	Silver (U)	Black (K)

Upper Bracket

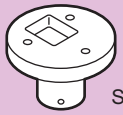

SZ-50NPT(For 1/2" NPT Pole)

Upper Bracket

Model	SZ-50-U	SZ-50U-U	SZ-50K-U
Color	Ivory White	Silver (U)	Black (K)

Pole

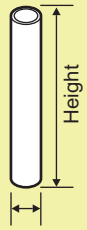

Steel Pole

Model	POLE-800S21	POLE-300S21	POLE-100S21
Height	800mm	300mm	100mm

Aluminum Pole

Model	POLE-800A21	POLE-300A21	POLE-100A21
Height	800mm	300mm	100mm

Mounting Bracket

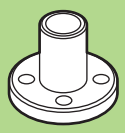

SZ-016A
(For φ21.7mm Pole)

SZ-70-B
(For φ21.7mm Aliminium Pole Only)

Wall Mount Bracket

SZ-020
(For φ21.7mm Pole)

SZ-017
(For φ21.7mm Pole)

Pre-assembled

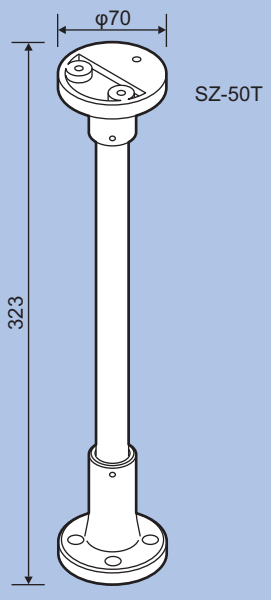

SZ-50T

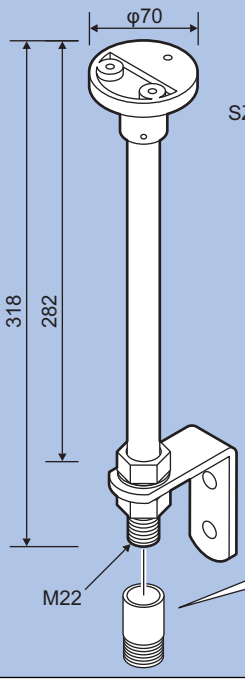

SZ-50L

Adaptor

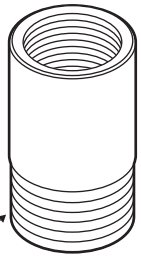

SZ-904
For 3/4" NPT

LU7-XE

Signal Tower

LED

Φ70

Stackable LED strobe module saves energy and requires low maintenance.

FEATURES

- Application* can be used with the LU7 Series Signal Tower.
- A visually stunning double-flash light pattern for immediate attention.
- Incorporates super-bright LED technology for enhanced visibility.
- Easily stackable and interchangeable, before or after installation.
- Has the CE mark and conforms to the requirements for the EC directive.
- Is UL Listed (File No. E215660) for use with LU7-02 and LU7-02FB.

- (1) For use with LU7-02, LU7-02S, and LU7-02FB bases only.
  Note: When using with LU7-02FB, the module should be controlled by the continuous common wire.

Brightness Comparison

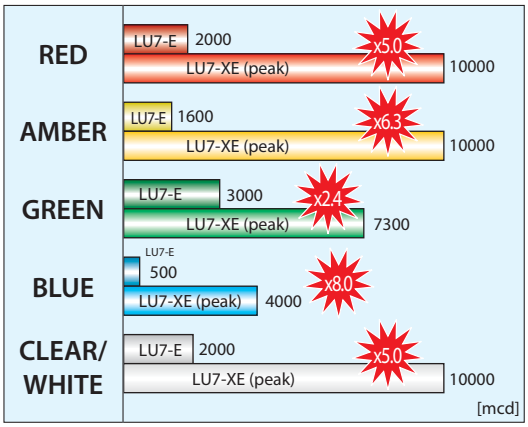

Dimensions

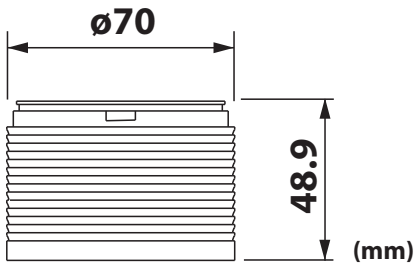

Specifications

LU7 LED Strobe Units**

Model	LU7-XE-R	LU7-XE-Y	LU7-XE-G	LU7-XE-B	LU7-XE-C
Unit Color	LED Unit Re	LED Unit A	LED Unit Gr	LED Unit Bl	LED Unit Cle ite
Rated Voltage	DC 24V				
Current Consumption	290mA		140mA	270mA	280mA
Mass (±10%)	70g				

**Operates with LU7-02, LU7-02S, and LU7-02FB bases only. When using with LU7-02FB, the module should be controlled by the continuous common wire.

MEMO

For more details, visit our website at http://www.patlite.com

LS7

Signal Tower

RoHS

LED

2 Alarm Sounds (FB Type)

90dB at 1m (FB Type)

IP65 (B Type:IP54)

Φ70

NPN/PNP Open-collector

Off-white Color Body without Buzzer

Off-white Color Body with Buzzer

Black Color Body without Buzzer

Black Color Body with Buzzer

Silver Color Body without Buzzer

Silver Color Body with Buzzer

New concept! Smart & smooth signal light body which improves harmony with equipment.

How to Order

LED Signal Tower LS7-①02②③④W⑤-⑥

Ex.: LS7-302WC-RYGNN	Body Color: Off-white	Lighting: Illumination
	Alarm: None	Wiring: M12 Connector
	LED Colors: Red, Amber, Green, (Blank), (Blank)	

① No. of LIghting Units
3:3 Tiers 5:5 Tiers

② Body Color
Blank: Off-white
D: Dark Gray
S: Silver

③ Lighting
Blank: Illumination Only
B: Illumination/Flashing

④ Alarm
Blank: No Alarm
B: Alarm

⑤ Wiring
C: M12 Connector
H: Lead Wires*

⑥ LED Color
R: Red
Y: Amber
G:Green
B:Blue
C: Clear/White
N:Blank

* F type models come with two alarms and are only available with Lead Wire and requires an 'FBWH' part no.
* C type models (M12 Connector type) are only available with a continous sound alarm.

Specifications

Model	Number of Lighting Units	Body Color	Rated Voltage	Mounting	Rated Current Consumption	Maximum Rated Current	Maximum Sound Pressure	Operating Temperature Range	Protection Rating	Mass: Lead-wire Type (H)		Mass: M12 Connector Type (C)	
										Illumination (No Mark)	Illumination/Flash/ 2 Alarms (FB)	Illumination (No Mark)	1 Alarm (B)
LS7-302	3 Tiers	Off-white (Blank) Dark Grey (D) Silver (S)	DC 24V (±10%)	Direct (Indoors Only)	Red: 20mA Amber, Green, Blue, Clear/White 30mA Alarm 40mA	Red: 35mA Amber, Green, Blue, Clear/White 40mA Alarm 55mA	Buzzer1 ab. 82dB Lead-wire Type (Intermittent Beep1) M12 Connector Type (Continuous Beep) Buzzer2 ab. 85dB Lead-wire Type (Intermittent Beep2) M12 Connector Type (None)	-30°Cto+60°C (Less than 85% RH)	Illumination Type: IP65* Buzzer Type: IP54	280g ±10%	370g ±10%	260g ±10%	320g ±10%
LS7-502	5 Tiers												

* IP67 available by special order

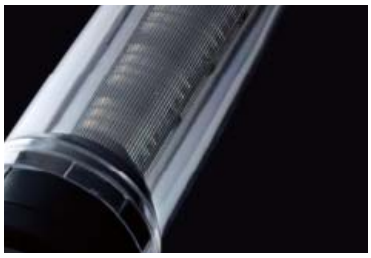

A smooth-surfaced body without any metal exposed

By changing the surface of the body into a smoother form, the adhesion of water and dust is reduced. Also, the structure does not have screws, shafts, etc., exposed, which gives comfort for applications in the lithium ion battery manufacturing and food processing industries. And, with the outer lens structure, the risk of environmental stress cracks due to oil mist is reduced. The lens cover is made of shock-resistant polycarbonate.

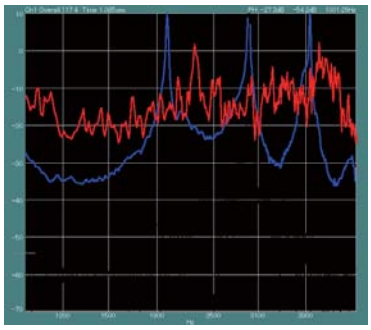

A sound heard throughout various environments

In addition to the existing lead wire, M12 connector quick disconnect is also available. Moreover, when moving to carry and to go out of the device, it is possible to detach it easily with the M12 connector.

Speaker Horn (Alarm Type)

Frequency graph of a metal-working shop sound mixed with buzzer2 alarm. (Inter-corporate Measurement)

* Buzzer1 (H type or C type) is measured at 2000Hz.

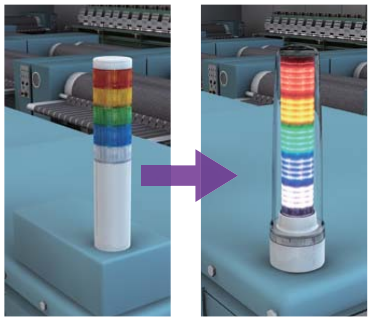

Easy attachment, no need for Relay Box

In addition to the conventional three-bolt installation, a two-bolt installation from the upper mount has been added to help make a smoother installation. Therefore, by using the mount as a relay box, it reduces the manufacturing cost for an extra relay box, which used to be a necessity up until now.

Fixed Mounting Style

M12 Connector Wiring & Tiered Construction

The stackable design and M12 connector quick disconnect (Cable Sold Separate) can drastically reduce labor and time. Moreover, the disconnection and reconnection of the body when removing it to relocate a machine has become smoother.

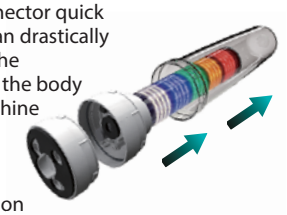

Stackable Construction

High-contrast Visibility

With the adoption of an inner lens, the LED emits a more efficient light. Moreso, the contrast is increased when the Signal Tower lights up or flashes, with a distinguishable signal color which remarkably improves visibility.

Remarkable display in ANY environment

The LS7 has passed various tests for water resistance, dust, temperature, and variable vibration frequency tests, etc., so that it can endure various environments.

All-plastic Bracket

Like the body, the smooth-shaped platform bracket won't collect water or dust. Since no metal parts like screws and shafts are exposed, worries of food tampering can be put to rest in the food process lines.

Dimensions

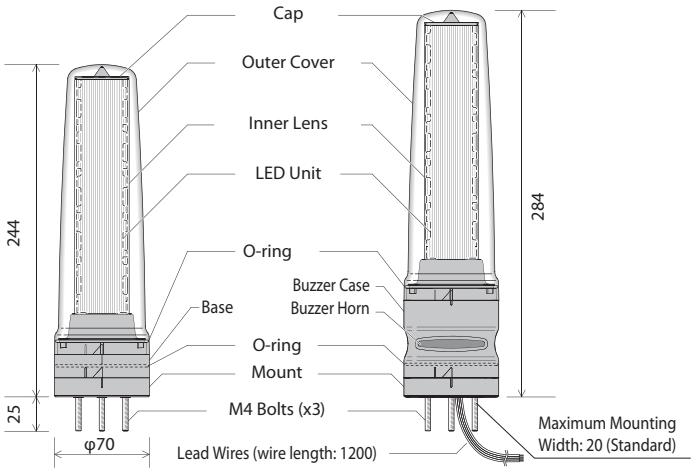

Product Front (Buzzer Horn Direction)

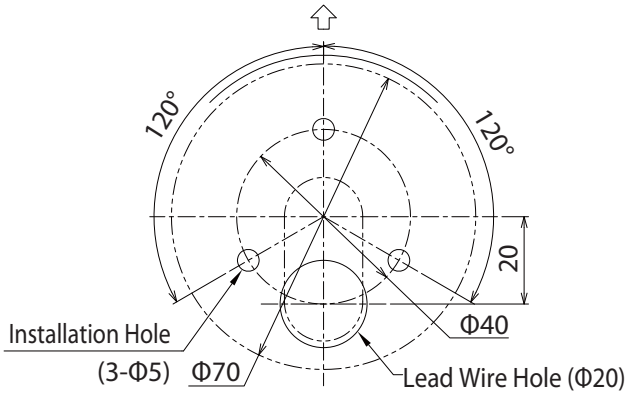

Optional Parts

Like the body, the smooth-shaped platform bracket won't collect water or dust. Since no metal parts like screws and shafts are exposed, worries of food contamination can be put to rest in food processing.

Platform Bracket SZ-100

Wall Mounting Bracket SZ-110

Multi-mount Bracket SZ-130

Multi-mount Bracket SZ-130 Installation DImiensions

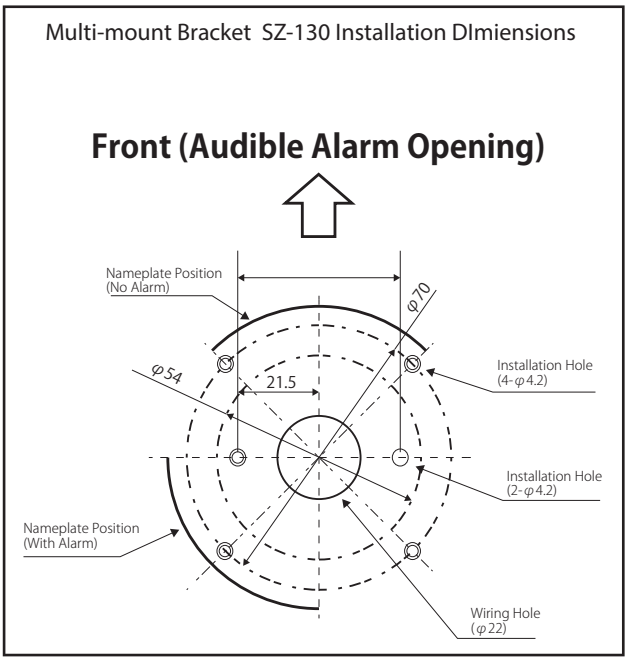

M12 Connector & Cable
(Manufactured by the OMRON Corp.)
SZ-120-02 Cable Length 2m (XS2F-D821-DH0-R)
SZ-120-05 Cable Length 5m (XS2F-D821-GH0-R)
SZ-120-10 Cable Length 10m (XS2F-D821-JH0-R)

* Only for connecting to the LS7.

Replacement Parts

Outer Cover for LS7*

Material: Polycarbonate

O-ring for LS7

Material: Silicone

Mount Cover for LS7
(Accessory)

Material: Silicone

Wiring

Contact Relay

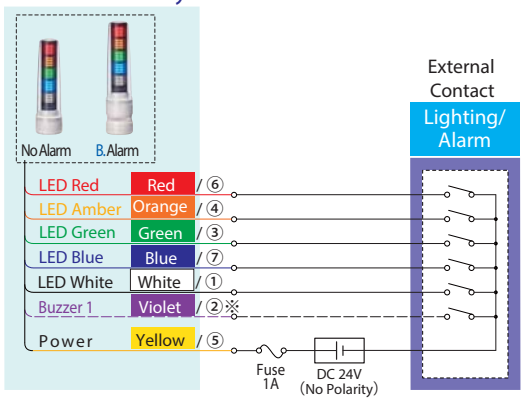

Contact Relay

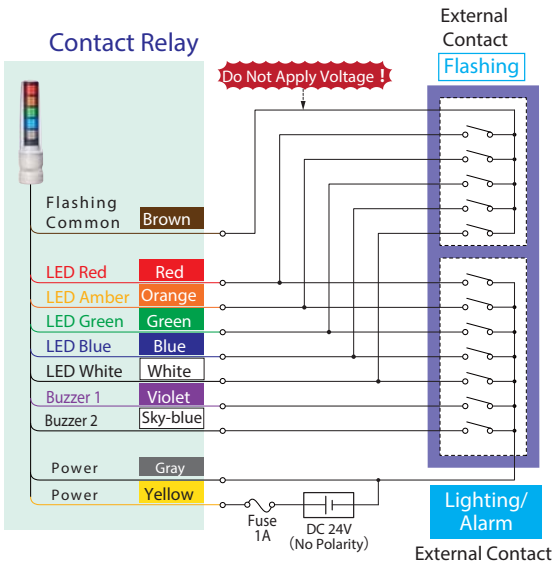

PLC (NPN Transistor)

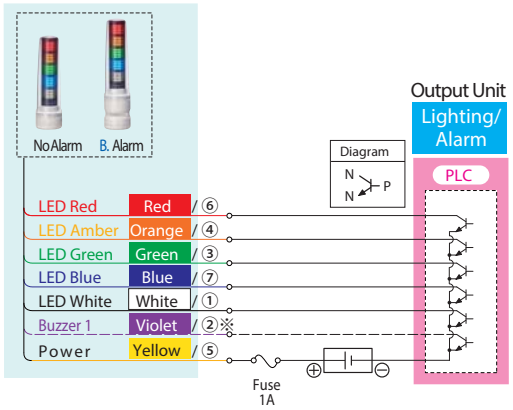

PLC (NPN Transistor)

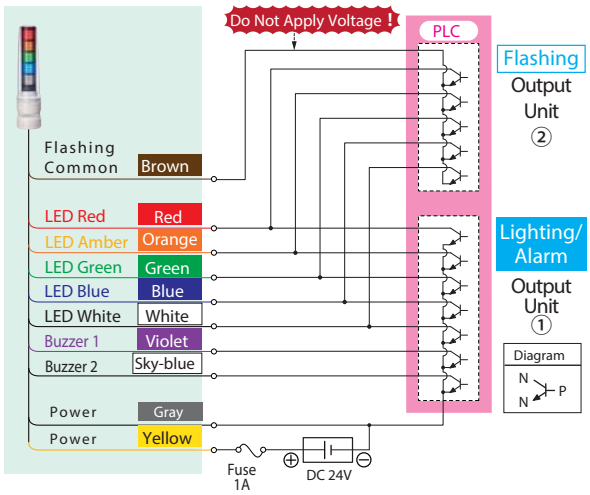

PLC (PNP Transistor)

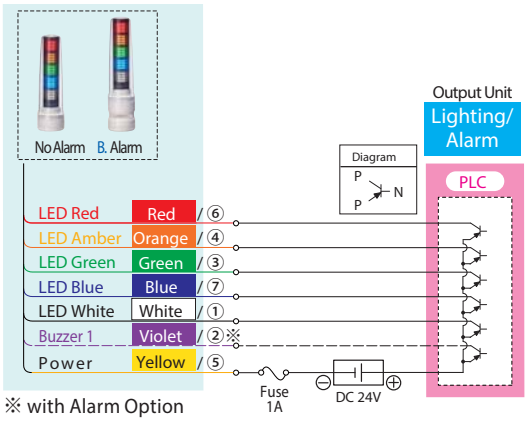

※ with Alarm Option

PLC (PNP Transistor)

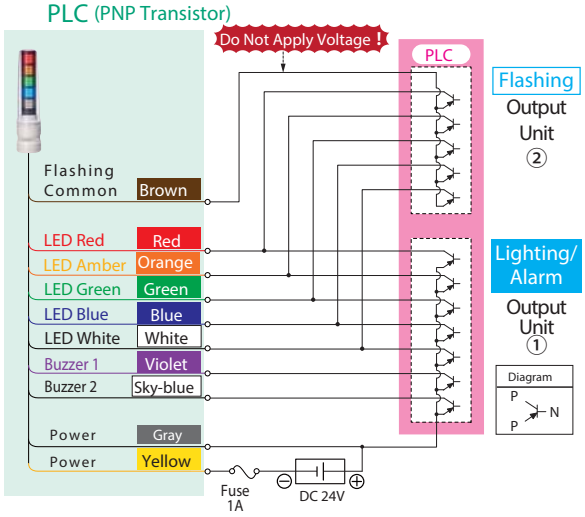

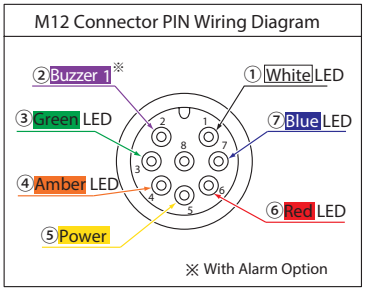

Note: When connecting the PLC outputs for illumination and flashing functions, the wiring (Common Wires) has to be separate between the flashing and non-flashing circuits.

WE/WEP

Signal Tower

RoHS CE

LED

2 Alarm Sounds (FB Type)

90dB at 1m (FB Type)

IP65 (FB Type: IP54)

NPN/PNP Open-collector

Ultra slim half-moon shaped Signal Tower offers seamless integration with most equipment.

FEATURES

- Clear vertical-cut lens for enhanced illumination over a wide perspective.
- Has an optional built-in audible alarm (FB type) with an output of 90dB (at 1m).
- Installation can be vertical or horizontal.
- Two body color selections of chrome plated or ivory white.
- Lens made of superior impact and heat resistant polycarbonate resin for superior durability and enhanced illumination.
- Both NPN and PNP Compatible for direct connection to a PLC (24V DC ONLY)
- Two lighting patterns of flashing and continuous lighting.
- Dust and water resistance rating of IP65 (except for FB type: IP54).
- Available colors are in Red, Amber, Green, Blue, and Clear/White.
- Has the CE mark and conforms to the requirements for the EC directive.
- Is a UL Recognized Component (File No. E215660).

37.5mm Super-thin Design!

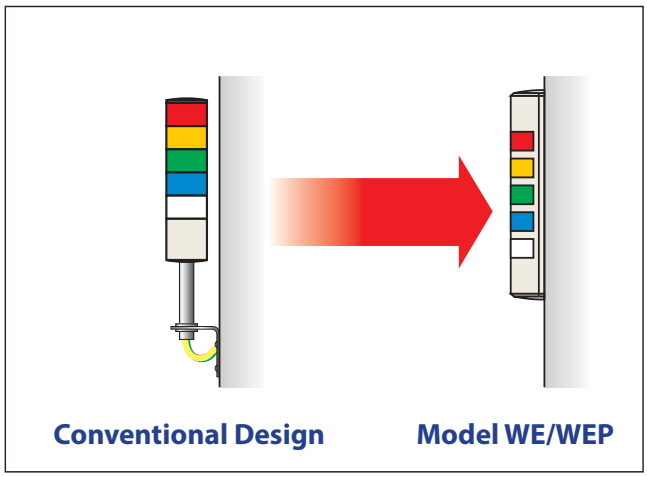

Patlite has perfected a 37.5mm-thin design that significantly enhances integration with the equipment as a built-in signal system.

Exclusively New LED Lighting Design

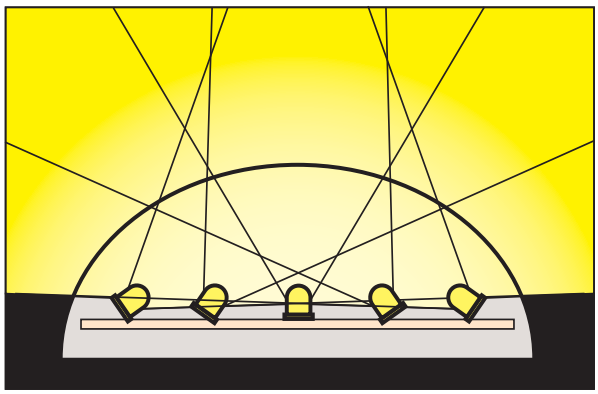

Patlite has created a revolutionary patented lighting design in which multiple LEDs project light across a broad peripheral area, ensuring equal intensity at the sides as well as the front. This design, with its side-projection technology, is a unique achievement in signal light design.

Dimensions

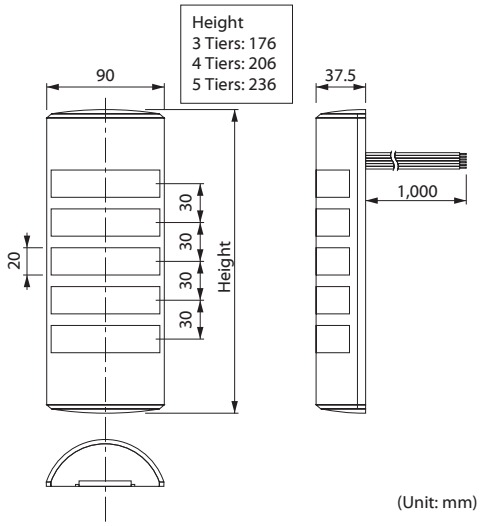

Mounting Dimensions

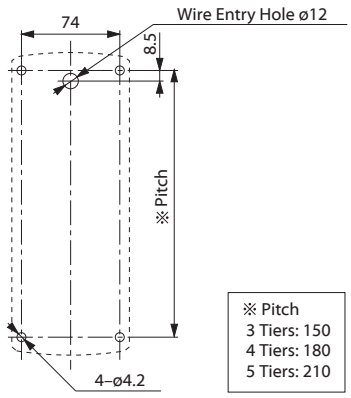

※ Pitch
3 Tiers: 150
4 Tiers: 180
5 Tiers: 210

(Unit: mm)

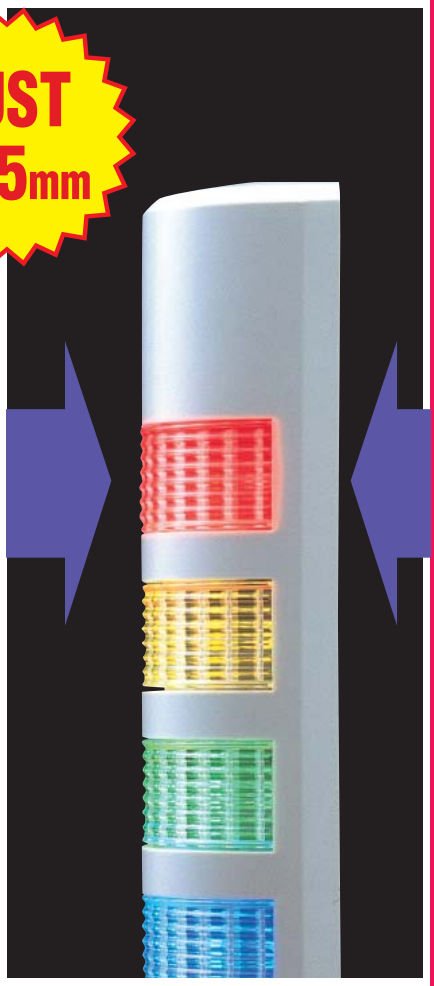

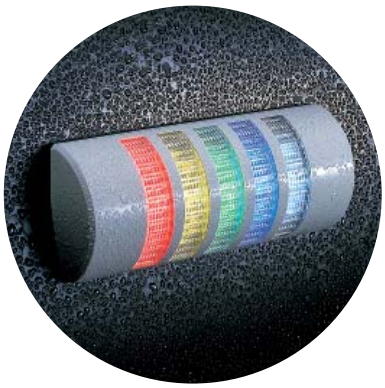

IP65 construction is safe for installation in damp locations and dusty factory environments.

How to Order

WEP-302FB-RYG

- Body Color: WE: Chrome-plated; WEP: Ivory White
- Tiers: 3~5
- Rated Voltage: 02: AC/DC 24V
- Type: Blank: Continuous Lighting; FB: Flashing/ Alarm
- Color: R: Red; Y: Amber; G: Green; B: Blue; C: Clear/White (Top to bottom)

Specifications

Stack Number	Model	Rated Voltage	Power Consumption	Mass
3 Tiers	WE(P)-302	AC/DC 24V	1.7W	260g
	WE(P)-302FB		2.7W	300g
4 Tiers	WE(P)-402		2.0W	310g
	WE(P)-402FB		3.2W	350g
5 Tiers	WE(P)-502		2.7W	310g
	WE(P)-502FB		3.7W	350g

Alarm Sounds	Lead Wire Color
Buzzer 1	Purple
Buzzer 2	Skyblue

Signal Line voltage and current per LED Module

Model	Rated Voltage	Signal Line Voltage	LED		Alarm	
			Signal Line Current		Signal Line Current	Inrush Current
			R, Y	G, B, C		
WE/WEP	AC/DC 24V	AC/DC 24V	30mA	25mA	40mA	250mA

Wiring

- AC/DC 24V Lighting Type

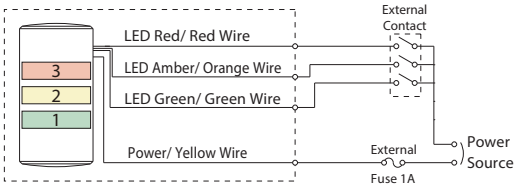

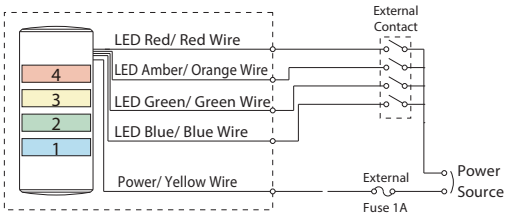

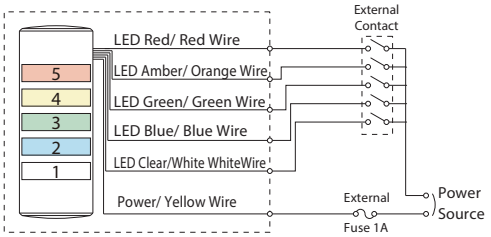

- AC/DC 24V Lighting/Flashing Type

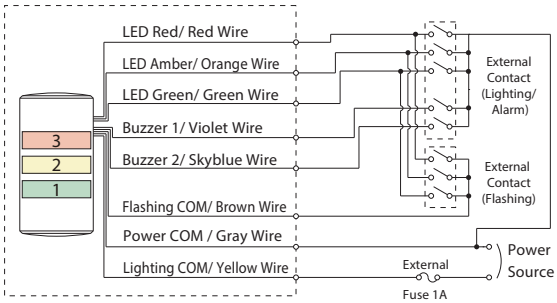

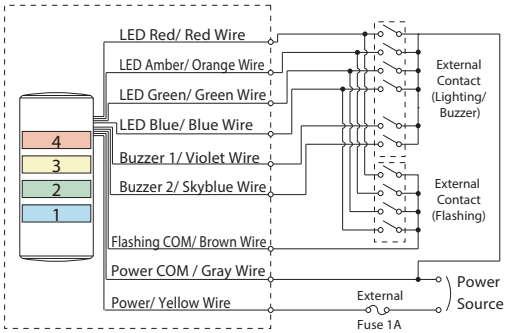

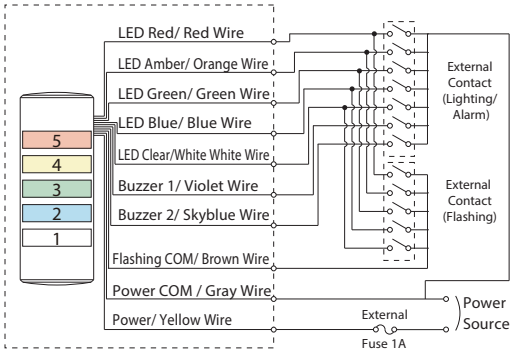

- DC 24V NPN Type

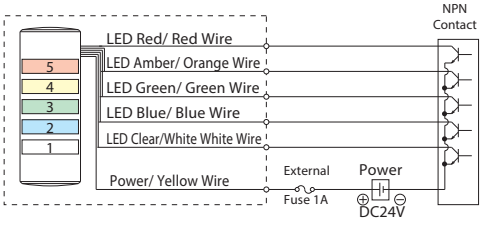

- DC 24V PNP Type

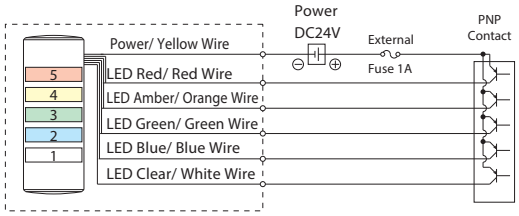

- DC 24V NPN FB Type

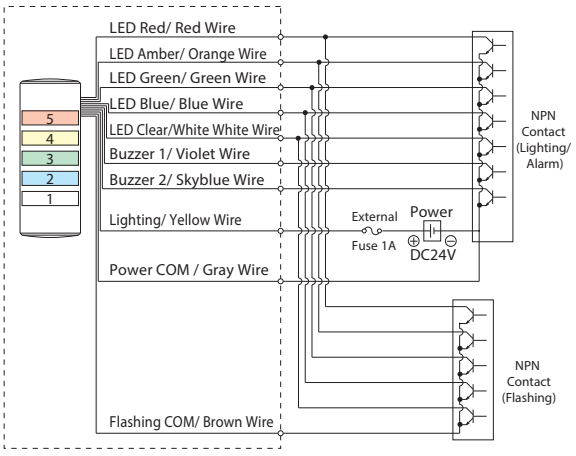

- DC 24V PNP FB Type

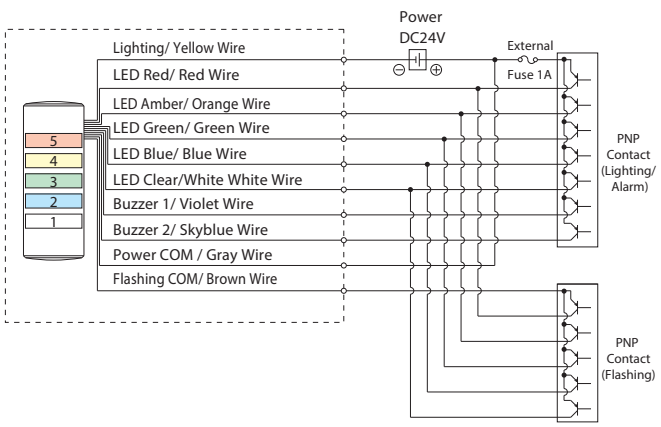

WME-A

Signal Tower

LED

2 Alarm Sounds (FB Type)

90dB at 1m

IP65 (FB Type:IP54)

W70 D80

NPN/PNP Open-collector

Exclusive wall-mount design saves space and enhances its integral appearance.

Interchangeable LED Modules

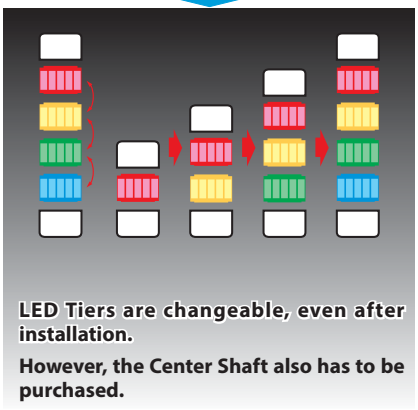

LED Tiers are changeable, even after installation.

However, the Center Shaft also has to be purchased.

FEATURES

- Built-in audible alarm (FB type)
- Volume output of up to 90dB (at 1m).
- Easy vertical or horizontal installation when used with mounting brackets.
- Interchangeable Modules need no re-wiring, even after installation.
- Install as an option with a compatible household switch box (JISC 8336 with 82.5m pitch).
- Main body is made of ABS resin.
- Lens is made with superior impact and heat resistant polycarbonate resin for superior durability and illumination.
- Compatible for use with NPN or PNP controlled inputs (24V DC type ONLY).
- Available Colors are in Red, Amber, Green, Blue, and Clear/White.
- Has the CE mark and conforms to the requirements for the EC directive.
- Is a UL Recognized Component (File No. E215660).

AVAILABLE BY SPECIAL ORDER

- 1 Tier Type
- Individual module control for single color

5 "Super Bright" LED Colors to choose from!

Red Amber Green Blue Clear/White

Exclusively New LED Lighting Design

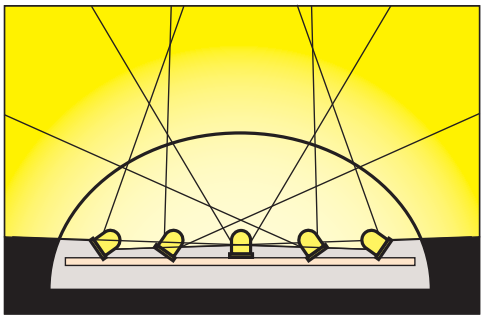

Patlite has created a revolutionary patented lighting design in which multiple LEDs project light across a broad peripheral area, ensuring equal intensity at the sides as well as the front. This design, with its side-projection technology, is a unique achievement in signal light design.

How to Order

WME-402AFB-RYGB

- Tiers: 2~5
- Rated Voltage: 02: AC/DC 24V; M2: AC 100~240V
- Type: Blank: Continuous Lighting; FB: Flashing / Alarm
- Color: R: Red; Y: Amber; G: Green; B: Blue; C: Clear/White (Top to bottom)

Specifications

Stack Number	Model	Rated Voltage	Power Consumption	Mass
2 Tiers	WME-202	AC/DC 24V	2.7W	390g
	WME-2M2A	AC 100 - 240V	4.6W	460g
3 Tiers	WME-302	AC/DC 24V	3.3W	470g
	WME-3M2A	AC 100 - 240V	6.0W	540kg
4 Tiers	WME-402	AC/DC 24V	4.4W	550g
	WME-4M2A	AC 100 - 240V	8.0W	620g
5 Tiers	WME-502	AC/DC 24V	5.5W	630g
	WME-5M2A	AC 100 - 240V	10.0W	700g

Signal Line voltage and current per LED Module

Model	Rated Voltage	Signal Line Voltage	LED		Alarm	
			Signal Line Current		Signal Line Current	Inrush Current
			R, Y	G, B, C		
WME-A	AC/DC 24V	AC/DC 24V	35mA	50mA	40mA	250mA
	AC 100V - 240V	DC 24V				

Dimensions

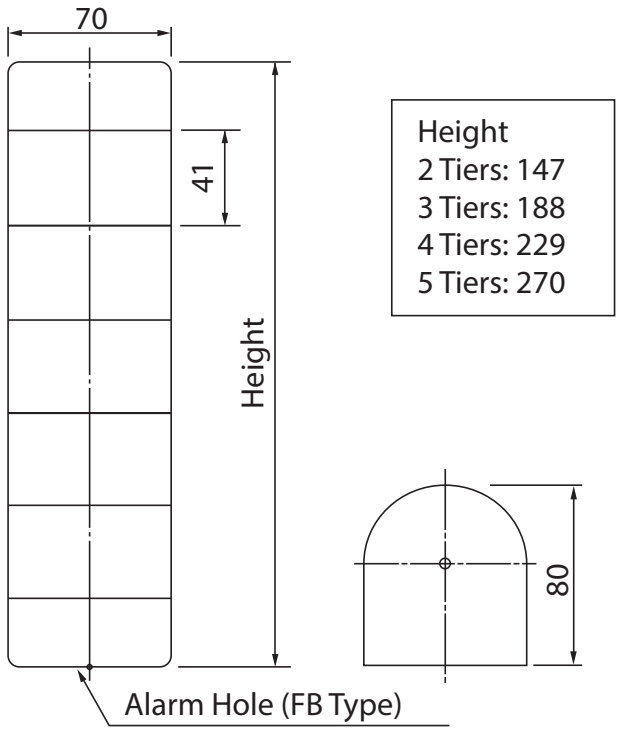

Height
2 Tiers: 147
3 Tiers: 188
4 Tiers: 229
5 Tiers: 270

Mounting Dimensions

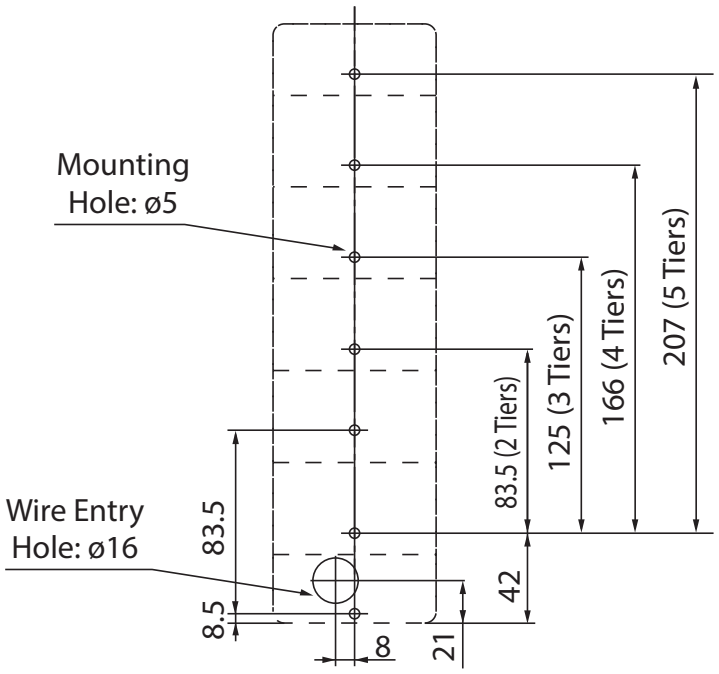

(Unit: mm)

- The LED Colors are stackable, even after installation.
  However, the applicable Center Shaft and backplate needs to be purchased.
- Install with the alarm in the downard direction in order to preserve the IP54 rating.

Wiring

- AC/DC 24V Lighting/Flashing Type

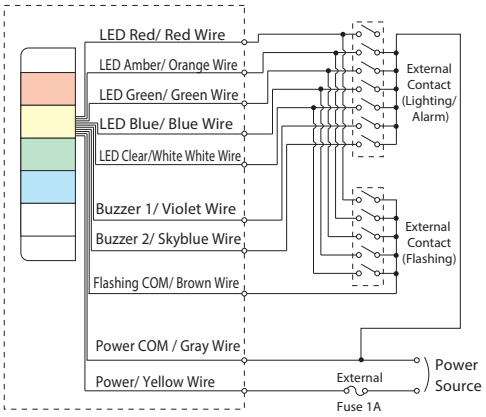

- AC Power Lighting/Flashing Type

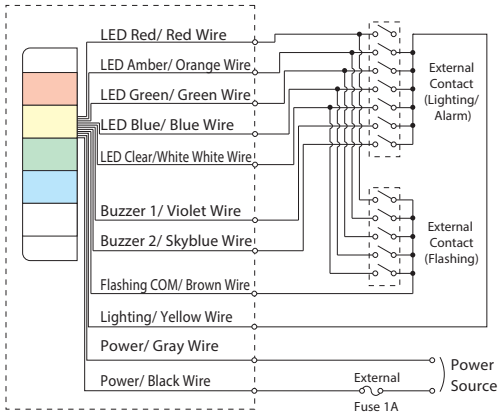

- DC 24V NPN Type

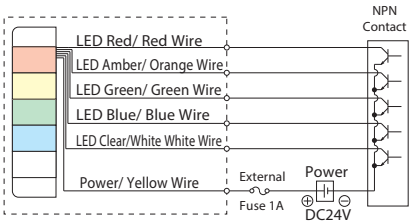

- AC Power NPN Type

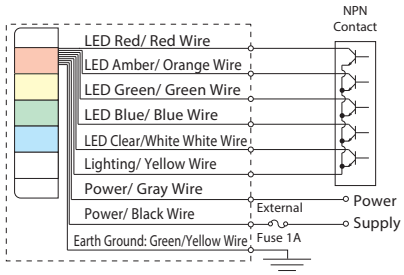

- DC 24V NPN FB Type

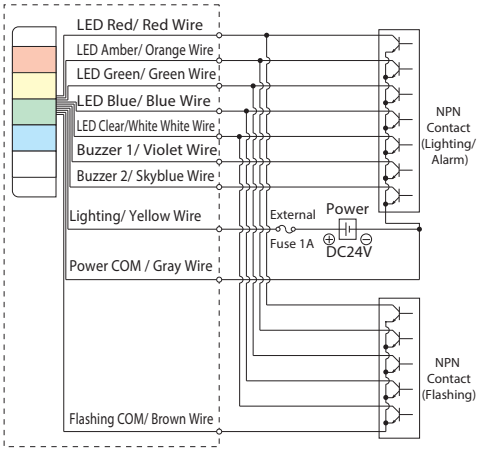

- AC Power NPN FB Type

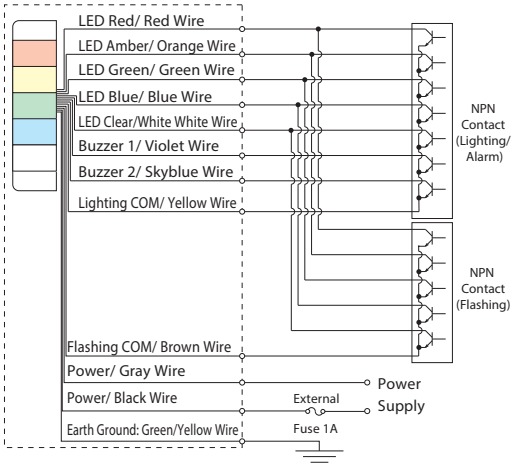

- DC 24V PNP Type

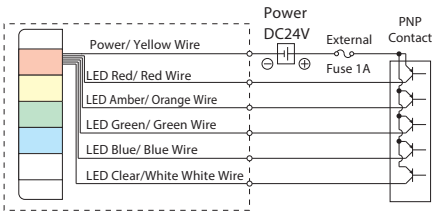

- DC 24V PNP FB Type

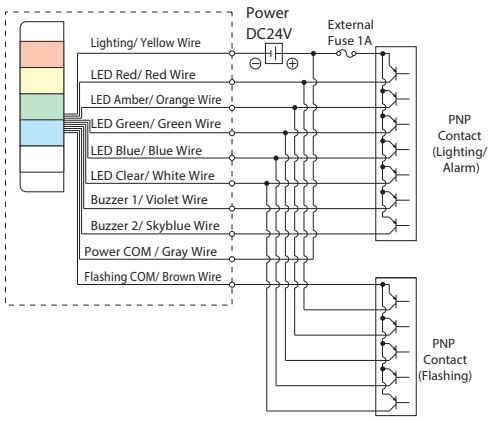

LGE

Signal Tower

LED

1 Alarm Sound (FB Type)

85dB at 1m

IP54

Φ100

NPN/PNP
Open-collector

Large Signal Tower featuring enhanced visibility and downward illumination, designed for large machines.

Triple Reflection System

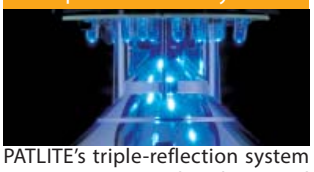

PATLITE's triple-reflection system creates an even brighter and distinctive illumination with its exclusive hybrid prism-cut lens for 5 color LED module variations.

Interchangeable LED Modules

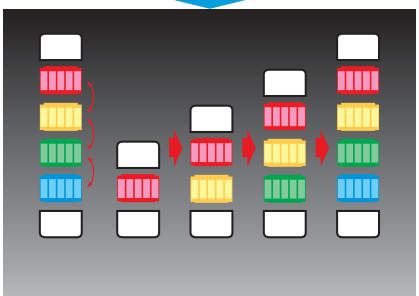

LED Tiers are changeable, even after installation.

Note: Shafts that match the number of tiers also has to be purchased.

FEATURES

- PATLITE's large prism cut lens to enhance illumination in the downward direction. (Lens Size: φ100mm x 60mm high)
- The FB type offers a flashing and continuous lighting pattern.
- A built-in buzzer (FB type) has a sound of up to 85dB (at 1m).
- Direct mount Installation.
- Interchangeable Modules need no re-wiring, even after installation.
- Lens is made of superior impact and heat resistant polycarbonate resin for superior durability and illumination.
- Both NPN and PNP compatible for the DC24V type; NPN compatible with the AC 100/220V type only.
- Available Colors are in Red, Amber, Green, Blue, and Clear/White.
- Has the CE mark and conforms to the requirements for the EC directive. (for 24V type)

How to Order (Pre-assembled)

LGE-402FB-RYGB

- Tiers: 1~4
- Rated Voltage: 02: AC/DC 24V; 10: AC 100V; 20: AC 220V
- Type: Blank: Continuous Lighting; FB: Flashing/ Alarm
- Color: R: Red; Y: Amber; G: Green; B: Blue; C: Clear/White (Top to bottom)

How to Order (Module)

Base Unit

LGEBC- 24 FB

- Model
- Rated Voltage: 24: AC/DC 24V; 100: AC 100V; 120: AC120V
- Type: Blank: Continuous Light; FB: Flashing/ Alarm

LED Light Module

LGEM-24- R

- Model
- Rated Voltage: 24: DC 24V
- Color: R: Red; Y: Amber; G: Green; B: Blue; C: Clear/White

Shafts (One Pair)

LGSHAFT- 1

- Tier: 1: 1 Tier; 2: 2 Tiers; 3: 3 Tiers; 4: 4 Tiers

5 "Super Bright" LED Colors to choose from!

Red Amber Green Blue Clear/White

Specifications (Pre-assembled)

(No Alarm)

Light System	Model	Rated Voltage	Power Consumption	Mass
1 Tier	LGE-102	AC/DC 24V	2.0W	0.4kg
	LGE-110	AC 100V	5.2W	1.0kg
	LGE-120	AC 220V		
2 Tiers	LGE-202	AC/DC 24V	4.0W	0.6kg
	LGE-210	AC 100V	7.7W	1.2kg
	LGE-220	AC 220V		
3 Tiers	LGE-302	AC/DC 24V	6.0W	0.8kg
	LGE-310	AC 100V	10.2W	1.4kg
	LGE-320	AC 220V		
4 Tiers	LGE-402	AC/DC 24V	8.0W	0.9kg
	LGE-410	AC 100V	12.7W	1.5kg
	LGE-420	AC 220V		

Alarm Type (Intermittent Rate: ab. 60 beeps per min)

Light System	Model	Rated Voltage	Power Consumption	Mass
1 Tier	LGE-102FB	AC/DC 24V	2.5W	0.4kg
	LGE-112FB	AC 100V	5.7W	1.0kg
	LGE-120FB	AC 220V		
2 Tiers	LGE-202FB	AC/DC 24V	4.5W	0.6kg
	LGE-212FB	AC 100V	8.2W	1.2kg
	LGE-220FB	AC 220V		
3 Tiers	LGE-302FB	AC/DC 24V	6.5W	0.8kg
	LGE-312FB	AC 100V	10.7W	1.4kg
	LGE-320FB	AC 220V		
4 Tiers	LGE-402FB	AC/DC 24V	8.5W	0.9kg
	LGE-412FB	AC 100V	13.2W	1.5kg
	LGE-420FB	AC 220V		

Specifications (Modules)

Light Unit	Color	Rated Voltage	Power Consumption
LGEM24-R	RED	AC/DC 24V	2.0W
LGEM24-Y	AMBER		
LGEM24-G	GREEN		
LGEM24-B	BLUE		
LGEM24-C	CLEAR		

Power Unit	Rated Voltage	Operation
LGEBC-120	AC 120V	Continuous
LGEBC-24	AC/DC 24V	
LGEBC-120FB	AC 120V	Continuous/ Flashing/Alarm
LGEBC-24FB	AC/DC 24V	

Part No.	Light Units per Base
LGSHAFT-1	1
LGSHAFT-2	2
LGSHAFT-3	3
LGSHAFT-4	4

Dimensions

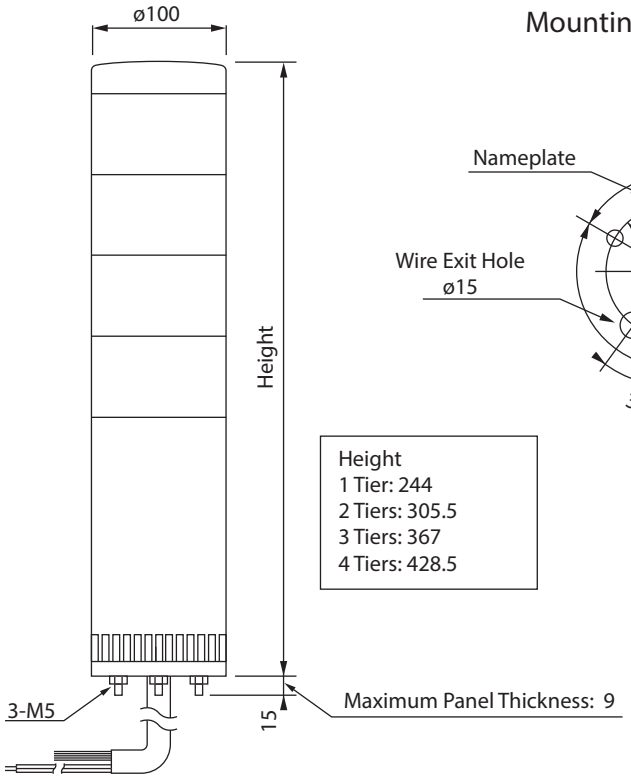

Mounting Dimensions

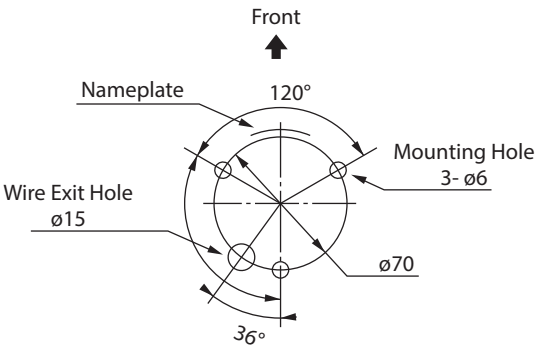

Height
1 Tier: 244
2 Tiers: 305.5
3 Tiers: 367
4 Tiers: 428.5

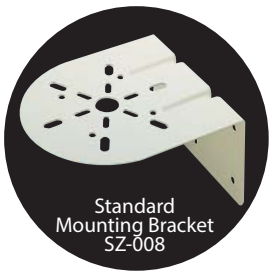

(Unit: mm)

- AC/DC 24V Lighting/Flashing Type

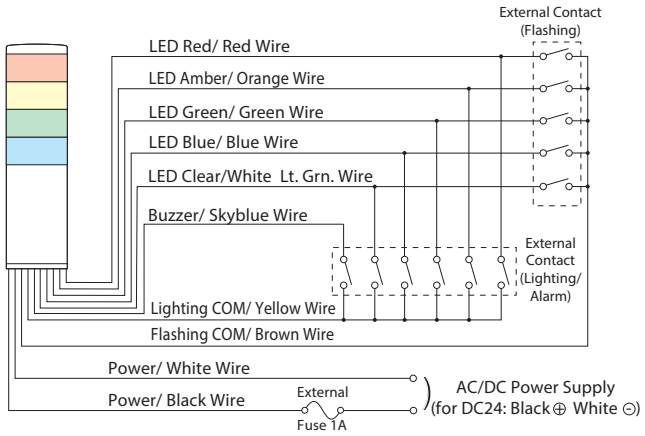

Signal Line voltage and current per LED Module

Model	Rated Voltage	Signal Line Voltage	LED	Alarm	
			Signal Line Current	Signal Line Current	Inrush Current
LGE-A	AC/DC 24V	AC/DC 24V	90mA	20mA	250mA
LGE-A	AC 100	DC 24V			
LGE-A	AC 220V				

- DC 24V NPN Type

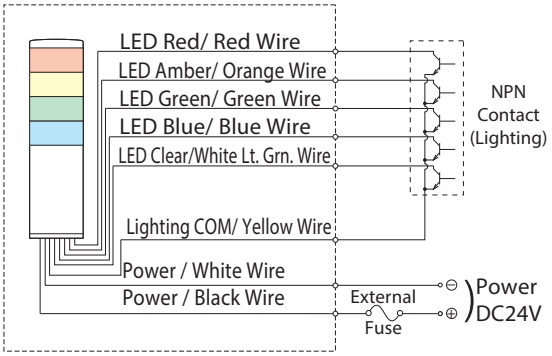

Skyblue and Brown Wire not used

- DC 24V PNP Type

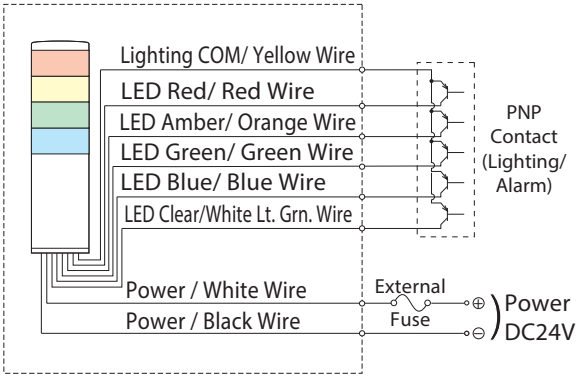

Skyblue and Brown Wire not used

- DC 24V NPN FB Type

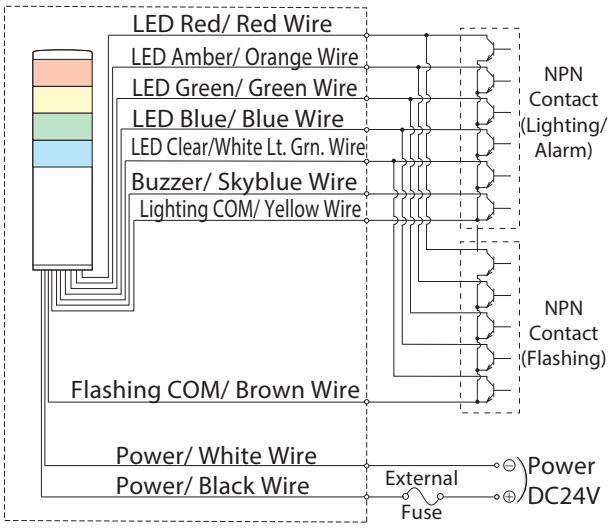

- DC 24V PNP FB Type

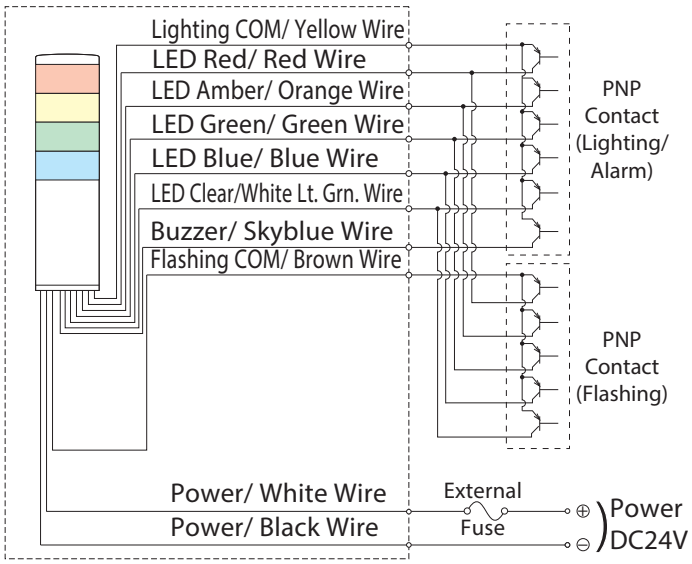

MEMO

For more details, visit our website at http://www.patlite.com

WSST

Manual Control Box

Terminal

WSST Manual Control Box

Desktop

Wall Mounting

Signal Towers, Cables and poles sold sepearately

PATLITE's WSST Control Box offers excellent all-in-one functionality to meet the growing needs of the manufacturing sector and beyond.

APPLICATIONS

- Workstations and work cells
- Real-time line status indication for managers and line supervisors
- Lean manufacturing, safety and security applications
- Manual assembly operations
- Retail check-out stations
- Call centers

FEATURES

- Universal manual control box for PATLITE LED Signal Towers.
- Sturdy metal construction with 6 color-coordinated push buttons.
- Recommended Signal Towers to choose from are ME; MES; LCE; LE; LES; LME-L; and SZ-60L & SZ-50L Pole Kits
- Install up to 5 Tiers (Red, Amber, Green, Blue and Clear/White).
- Add optional sound alarm or flash functionality (must purchase FB type Signal Towers).
- Various mounting methods include Wall or Desktop installations or as Remote. Recommended Signal Towers for Remote applications (10 ft. cable included) are the LCE-U (with "L" bracket) or LME-U (with flange-mount bracket) Signal Towers.
- Power Supply is included (WSST-KIT).

How to Order

WSST-KIT

Package Description

KIT: Complete Kit includes
- Control Box
- Cable Gland
- 16mm Plug (1pc)
- 22mm Plug (2 pcs)
- Instruction Manual
- Power Supply

CB: Complete Kit (excluding Power Supply)

PS: Power Supply Only

Specifications

Rated Voltage	Operating Voltage	Operating Teperature Range	Mounting Location	Mass (±10%)
DC 24V (Non-polar)	DC 21.6 -26.4V	0^{0}C- +40^{0}C (RH less than 90%)	Indoor Only	1.11kg (Switch Box)

Complete HSST-312 Kit

Control Box

12 in.
Mounting Pole
& Bracket

HSST

Manual Indicating Light

LED

The HSST includes a 3-tiered LED Signal Tower kit as a low- cost complete turn-key solution for manual assembly factories where lean manufacturing practices are dependent upon the overall operation efficiency.

APPLICATIONS

- Assembly workstations
- Safety and security applications
- Call centers
- Retail check stands
- Hospitals
- Airports

FEATURES

- Complete kit includes a 50mm diameter red, amber, green 3-tier LED Signal Tower with 4-foot Cable, poles, three-button control box, AC power adaptor and mounting brackets that can fit onto standard cubicle partitions.
- AC power adapter (UL Listed) rated at 120VAC with 6 ft. cable length is included to allow easy set-up in any location.
- LED light illumination offers maintenance-free operation.
- Optional Extention Cable (Part No. DT-HSST-10) available in 10 ft. segments.
- Mounting screws included with the three-button control box.
- Choice of 3 in. (80mm) or 12 in. (300mm) pole included in set.

How to Order

HSST-312

Package Description

312: Complete Kit including
- 3 button Control Box
- Control Box mounting screws
- 3 tiered Signal Tower (Red, Amber, Green)
- AC 120V Power Adaptor
- 4 ft. cable for Signal Tower
- 3 " Pole (80mm)
- 12" Pole (300mm)
- Pole Mounting Brackets
- Instruction Manual

Specifications

Model	Rated Voltage	Tiers	Power Supply
HSST-312	DC 24V	3 Tiers (R,Y,G)	AC120V / DC24V (Center Negative)

MEMO

For more details, visit our website at http://www.patlite.com

Signal Lights

NE-24

LED Dome Signal Light

RoHS CE

LED

IP65

Φ57

NPN/PNP
Open-collector

NE Series LED Dome Indicator Light; The dome-shaped globe provides increased visibility while the LEDs provide years of maintenance-free operation.

FEATURES

- Enhanced Illumination with the use of long-life, super bright LEDs.
- Low power consumption increases energy efficiency.
- High vibration-resistance and unnecessary bulb replacement makes it maintenance-free.
- Uses a terminal block for easy wiring.
- Applications are suitable for small tooling machines, control panels, etc.
- Available colors are in Red, Amber, Green, Blue, and Clear/White.
- Has the CE mark and conforms to the requirements for the EC directive.

Dimensions

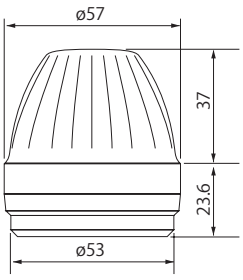

Mounting Dimensions

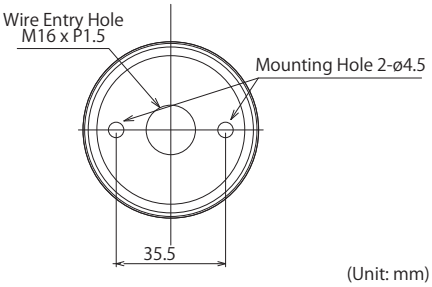

(Unit: mm)

How to Order

NE 24 -□

- Model
- Rated Voltage
  24: DC 24V
- Color
  R: Red
  Y: Amber
  G: Green
  B: Blue
  C: Clear/White

Specifications

Model	Color	Rated Voltage	Power Consumption	Operating Temperature Range	Mass
NE-24-R	RED	DC 24V	0.63W	-30 C - +50 C	55g
NE-24-Y	AMBER				
NE-24-G	GREEN		0.56W		
NE-24-B	BLUE		0.53W		
NE-24-C	CLEAR/WHITE		0.45W		

Wiring

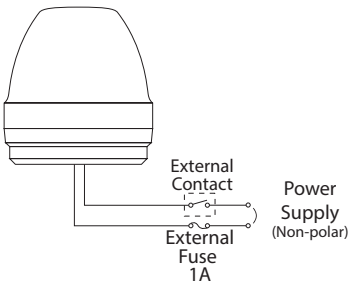

KHE

LED Multi-signal Light

Optional Rubber Gasket SZ-200A

LED Off with Clear Globe

LED

IP65 with SZ-200A

Φ100

NPN/PNP Open-collector

KHE features three flashing patterns for diverse applications.

FEATURES

- Super-bright long life LED's used for three signaling patterns that simulate rotation, strobe, and blinking.
- Enhanced Illumination with the use of long-life, super bright LEDs.
- No motor or bulb replacement makes it Maintenance-free.
- Low power consumption increases energy efficiency.
- Indoor installation can be upright, inverted or sideways; Outdoors is for upright only.
- Available colors are in Red, Amber, Green, and Blue.
- Has the CE mark and conforms to the requirements for the EC directive.
- Is UL Listed (File No. E215660).

AVAILABLE BY SPECIAL ORDER

- Body Color: Silver

Dimensions

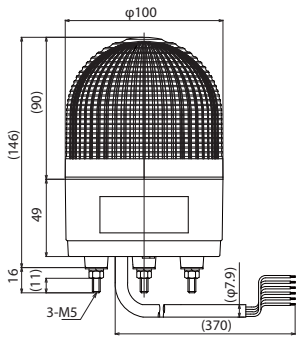

Mounting Dimensions

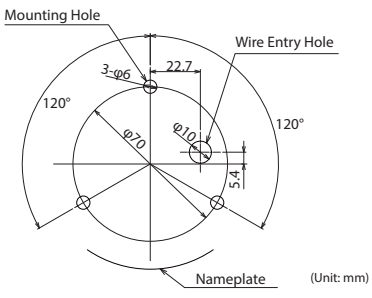

How to Order

KHE 24 -□-Z

- Model: KHE
- Rated Voltage: 24: DC 24V
- Color: R: Red; Y: Amber; G: Green; B: Blue
- Dome: None: Colored; Z: Clear

Specifications

Model	Color	Rated Voltage	Power Consumption	Flash Patterns			Mass
				Flash	Rotation	Strobe	
KHE-24	RED	DC 24V	8.2W	55 ±10% fps	175 ±10% fps	75 ±10% fps (double-flash)	450g
	AMBER						
	GREEN		10.1W				
	BLUE		21.6W				

Wiring

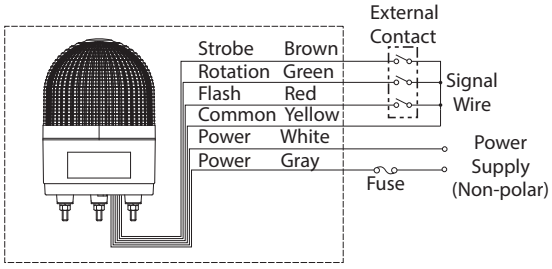

PEW-A/PES-A

Multi-speed Flashing Signal Light

RoHS

LED

1 Alarm Sound (PEW-B)

85dB at 1m (PEW-B)

IP55*

Φ82

NPN Open-collector

Optional Rubber Gasket SZ-210

* PEW-A: IP54 (IP23 with side-wire exit mounting)
* PES-A: IP55 with the optional rubber gasket SZ-210 (IP23 without SZ-210).

Dome shape LED Signal Light featuring enhanced visibility and maintenance-free operation.

FEATURES

- Has maintenance-free LED's that consume nearly half the power incandescent bulb models (AC100V/200V) do.
- Newly-developed triple-reflection system for enhanced visibility and low power consumption.
- PEW-B type has a built-in adjustable audible alarm with a volume of up to 85dB (at 1m).
- Indoor installation can be upright, inverted or sideways; Outdoors is for upright only.
- The PES is rated for IP55 with the optional rubber gasket SZ-210 (IP23 without SZ-210).
- Has the CE mark and conforms to the requirements for the EC directive. (for 24V type)
- Is a UL Recognized Component (File No. E215660, for 24V, 120V, 230V types only).
- Dome is made of superior weather resistant and light translucent acrylic resin.
- Three flashing patterns of 60/120/180 fpm, switch selectable.
- The PEW is rated for IP54 (IP23 with side-wire exit mounting)
- Available colors are in Red, Amber, Green, and Blue.

AVAILABLE BY SPECIAL ORDER

- Body Color: Silver
- IP65: PEW type only

How to Order

PEW-□A□-□

Model

Rated Voltage
24: AC/DC24V
100: AC 100V
120: AC 120V
200: AC 200V
230: AC 230V

Type
Blank : Continuous/ Flash
B : Continuous/Flashing/ Alarm

Color
R: Red
Y: Amber
G: Green
B: Blue

PES-□A-□

Model

Rated Voltage
24 : AC/DC 24V
100: AC 100V
120: AC 120V
200: AC 200V
230: AC 230V

Color
R: Red
Y: Amber
G: Green
B: Blue

Dimensions

PEW-A

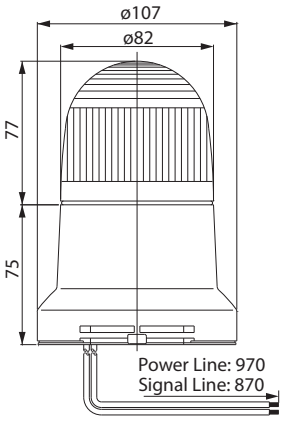

PES-A

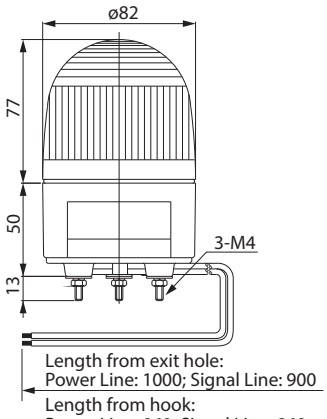

Mounting Dimensions

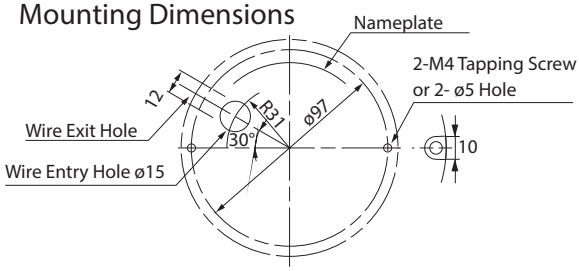

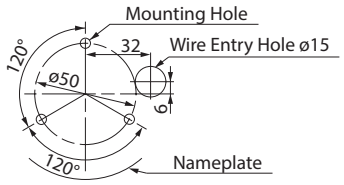

Wiring

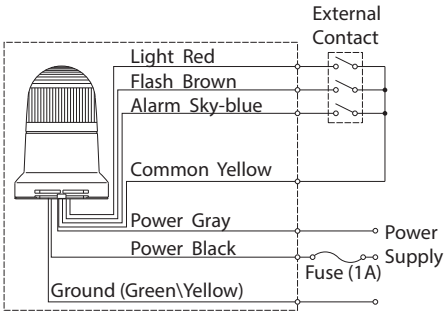

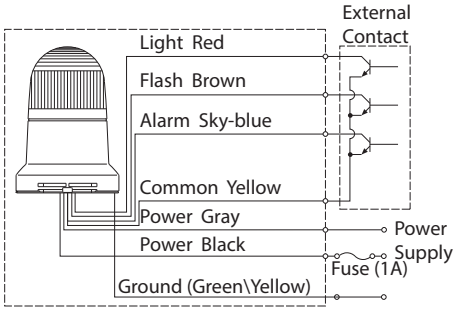

* All Models have the same wiring
* Sky-blue signal wire is for buzzer type only
* Ground wire is added for high-voltage types only

Specifications

Model	Color	Rated Voltage	Power Consumption	Inrush Current	Mass
PEW-24A	R/Y	AC/DC 24V	1.2W	2.5A	320g
	G/B		1.5W		
PEW-24AB	R/Y		2.2W		340g
	G/B		2.5W		
PEW-100A	R/Y	AC 100V	2.8W	1.0A	520g
	G/B		3.3W		
PEW-100AB	R/Y		5.3W		540g
	G/B		5.8W		
PEW-120A	R/Y	AC 120V	3.0W		520g
	G/B		3.5W		
PEW-120AB	R/Y		5.7W		540g
	G/B		6.2W		
PEW-200A	R/Y	AC 200V	2.5W	0.5A	520g
	G/B		3.2W		
PEW-200AB	R/Y		4.9W		540g
	G/B		5.6W		
PEW-230A	R/Y	AC 230V	3.1W		520g
	G/B		3.8W		
PEW-230AB	R/Y		5.9W		540g
	G/B		6.4W		

Model	Color	Rated Voltage	Power Consumption	Inrush Current	Mass
PES-24A	R/Y	AC/DC 24V	1.2W	2.5A	240g
	G/B		1.5W		
PES-100A	R/Y	AC 100V	4.2W	1.0A	430g
	G/B		4.7W		
PES-120A	R/Y	AC 120V	4.4W		
	G/B		4.9W		
PES-200A	R/Y	AC 200V	4.0W	0.5A	
	G/B		4.7W		
PES-230A	R/Y	AC 230V	4.6W		
	G/B		5.3W		

KPE-A

Flashing/Rotating Light

LED

IP23

Φ162

Revolving Warning Light featuring maintenance-free LED's, Corrosion-proof plastic and adjustable flashing cycles.

FEATURES

- Enhanced design with special high-intensity illumination to improve light diffusion and ensure sufficient brightness, even outdoors.
- Internally adjustable flashing cycle between 50 and 200 times per minute.
- Extended long-life with LEDs so no bulb replacement is needed, perfect for "hard-to-service" locations.
- Indoor installation can be upright, inverted or sideways; Outdoors is for upright only.
- With an electronic rotating light system, no worn-out motors to replace.
- Main body is made of special weather-resistant resin.
- Dome is made from superior weather-resistant and light translucent acrylic resin.
- Stainless mounting bolts with corrosion-proof screws.
- Available Colors are Red and Amber.

Specifications

Model	Rated Voltage	Power Consumption	Flash Rate	Mass
KPE-100A	AC 100V	Continuous: 4W Flashing: 9W	50 - 200 rpm 60 fpm	1.5kg
KPE-220A	AC 220V			

How to Order

KPE-□ A-□

- Model
- Rated Voltage
  - 100: AC 100V
  - 220: AC 220V
- Color
  - R: Red
  - Y: Amber

Dimensions

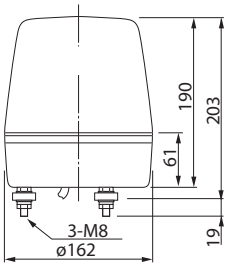

Mounting Dimensions

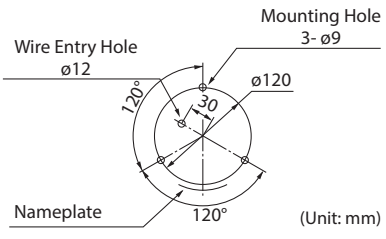

(Unit: mm)

Wiring

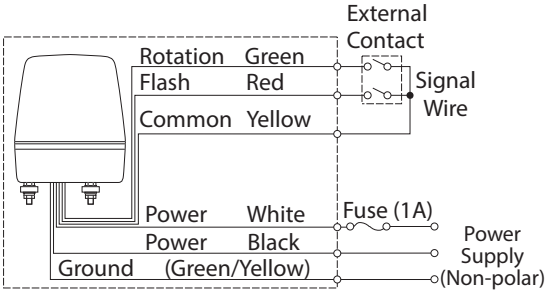

MEMO

MEMO

For more details, visit our website at http://www.patlite.com

Revolving Warning Light

SKHE / SKHEB

Super-bright LED Revolving Warning Light

RoHS CE

LED

90dB at 1m (SKHEB)

IP23

Φ118

Compact LED revolving warning light featuring one super-bright LED chip and an enhanced high dispersion reflection system.

FEATURES

- SKHEB series includes an internal alarm (hi-pitched tone) of 90dB (at 1m) that is synchronized with the light operation.
- Indoors allows upright, inverted, and horizontal installation; outdoors allows upright installation only.
- Has the CE mark and conforms to the requirements (for 12V, 24V type only) for the EC directive.
- Compact motor with high durability and energy-efficient characteristics.
- Energy-efficient by using only 1 LED chip which is super-bright.
- Dome lens is made of impact and heat resistant polycarbonate resin.
- Colors available are Red, Amber, Green, and Blue.

How to Order

SKHE□-□A-□

- Model
- Alarm: None: Without; B: With
- Rated Voltage: 12 : DC 12V; 24 : DC 24V; 100: AC 100V; 200: AC 200V
- Color: R: Red; Y: Amber; G: Green; B: Blue

Dimensions

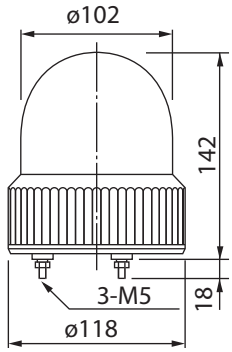

Mounting Dimensions

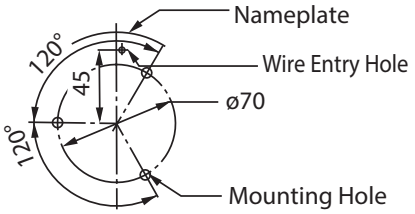

(Unit: mm)

Specifications

Model	Rated Voltage	Current Consumption	Flash Rate (fpm)	Mass
SKHE/SKHEB-12	DC 12V	0.25A	120	400g
SKHE/SKHEB-24	DC 24V	0.16A		
SKHE/SKHEB-100	AC 100V	0.04A		600g
SKHE/SKHEB-200	AC 200V	0.02A		

Newly developed reflector for LED revolving warning light

The PATLITE LED revolving warning light uses a unique and patented reflecting system, solely designed for these models. Even though the dispersion characteristics of the LED chip is less than an incandescent bulb, PATLITE's unique design creates an equivalent dispersion effect with the light reflector.

The uniquely designed reflectors not only reflect upward and to the side, but also downward; this cannot be achieved by incandescent bulb type revolving warning lights. The PATLITE LED revolving warning light is suitable for applications where high visibility from a low angle is required.

RLE

Revolving Warning Light

Optional Rubber Gasket SZ-210

LED

IP65 (with SZ-200A)

Φ82

LED Signal Light featuring energy-saving and enhanced illumination with an LED integrated reflection system.

FEATURES

- Indoors allows upright, inverted, and horizontal installation; outdoors allows upright installation only.
- Dome lens is made of superior impact and heat resistant polycarbonate resin.
- Compact motor with high durability and energy-efficient characteristics.
- LED integrated reflection system for enhanced illumination.
- Energy-efficient and maintenance-free LED array
- Main body is made of impact and heat resistant ABS resin.
- Colors available are Red, Amber, and Green.

Specifications

Model	Rated Voltage	Power Consumption	Flash Rate (fpm)	Mass
◎ RLE-12	DC 12V	1.7W	120	400g
RLE-24	DC 24V	3.9W		
RLE-100	AC 100V	2W		600g
RLE-220	AC 220V			

◎ Available by Special Order

How to Order

RLE- □ **-** □

Model

Rated Voltage
- 12 : DC 12V
- 24 : DC 24V
- 100: AC 100V
- 200: AC 200V

Color
- R: Red
- Y: Amber
- G: Green
- B: Blue

Dimensions

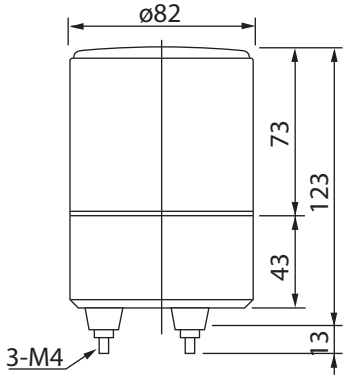

Mounting Dimensions

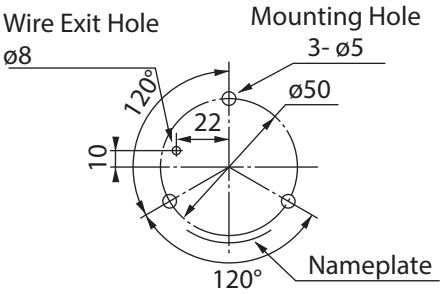

(Unit: mm)

RKE/RKEB/RHE/RHEB

Super-bright LED Revolving Warning Light

RoHS

LED

IP55 (with SZ-200A)

Φ100

Optional Rubber Gasket SZ-200A

Compact LED revolving warning light featuring one super-bright LED chip and an enhanced high dispersion reflection system.

FEATURES

- RHEB/RKEB includes an internal alarm (hi-pitched tone) of 90dB (at 1m) that is synchronized with the light operation.
- Has the CE mark and conforms to the requirements (for 12V, 24V type only) for the EC directive.
- Compact motor with high durability and energy-efficient characteristics.
- Dome lens is made of impact and heat resistant polycarbonate resin.
- Energy-efficient by using only 1 LED chip which is super-bright.
- Main body is made of impact and heat resistant ABS resin.
- Colors available are Red, Amber, Green, and Blue.
- Uses a terminal block for easy wiring.

How to Order

RKE □-□-□

- Model: RKE, RHE
- Alarm: None: Without; B: With
- Rated Voltage: 12 : DC 12V; 24 : DC 24V; 100: AC 100V; 200: AC 200V
- Color: R: Red; Y: Amber; G: Green; B: Blue

Specifications

Model	Rated Voltage	Current Consumption	Flash Rate	Mass
RKE/RKEB-12	DC 12V	0.25A	120 fpm	400g
RKE/RKEB-24	DC 24V	0.16A		
RKE/RKEB-100	AC 100V	0.04A		600g
RKE/RKEB-200	AC 200V	0.02A		
RHE/RHEB-12	DC 12V	0.25A		400g
RHE/RHEB-24	DC 24V	0.16A		
RHE/RHEB-100	AC 100V	0.04A		600g
RHE/RHEB-200	AC 200V	0.02A		

Dimensions

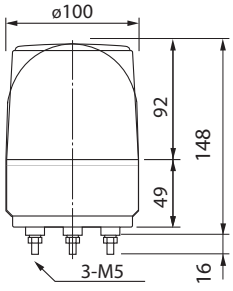

Mounting Dimensions

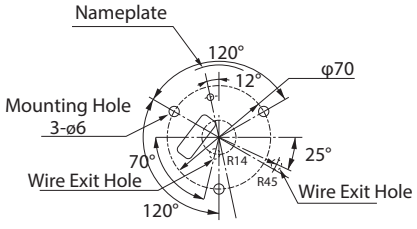

(Unit: mm)

Newly developed reflector for LED revolving warning light

The PATLITE LED revolving warning light uses a unique and patented reflecting system, solely designed for these models. Even though the dispersion characteristics of the LED chip is less than an incandescent bulb, PATLITE's unique design creates an equivalent dispersion effect with the light reflector.

The uniquely designed reflectors not only reflect upward and to the side, but also downward; this cannot be achieved by incandescent bulb type revolving warning lights. The PATLITE LED revolving warning light is suitable for applications where high visibility from a low angle is required.

RKEM/ RHEM

Super-bright LED Revolving Warning Light

CE RoHS

LED

IP55 (with SZ-200A)

Φ100

Brushless Motor

Compact LED revolving warning light featuring one super-bright LED chip with an enhanced dispersion reflection system and brushless motor.

FEATURES

- Has the CE mark and conforms to the requirements (for 12V, 24V type only) for the EC directive.
- Brushless compact motor with high durability and long-lasting characteristics.
- Dome lens is made of impact and heat resistant polycarbonate resin.
- Energy-efficient by using only 1 LED chip which is super-bright.
- Main body is made of impact and heat resistant ABS resin.
- Colors available are Red, Amber, Green, and Blue.
- Uses a terminal block for easy wiring.

How to Order

RKEM - □ - □

Model
RKEM
RHEM

Rated Voltage
12 : DC 12V
24 : DC 24V
M2 : AC 100 - 200V

Color
R: Red
Y: Amber
G: Green
B: Blue

Dimensions

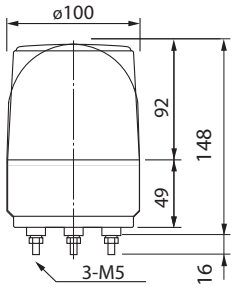

Mounting Dimensions

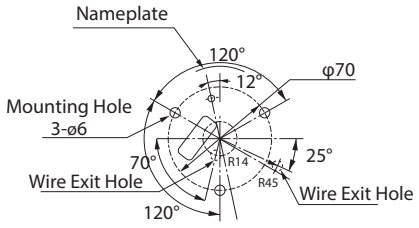

(Unit: mm)

Specifications

Model	Rated Voltage	Current Consumption	Flash Rate	Mass
RKEM-12	DC 12V	0.20A	120 fpm	400g
RKEM-24	DC 24V	0.14A		
RKEM-M2	AC 100-200V	0.20A-0.06A		
RHEM-12	DC 12V	0.20A		
RHEM-24	DC 24V	0.14A		
RHEM-M2	AC 100-200V	0.20A-0.06A		

Conventional Motor Construction

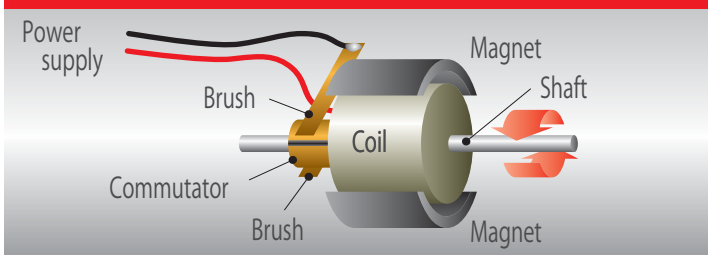

Brushless Motor Construction

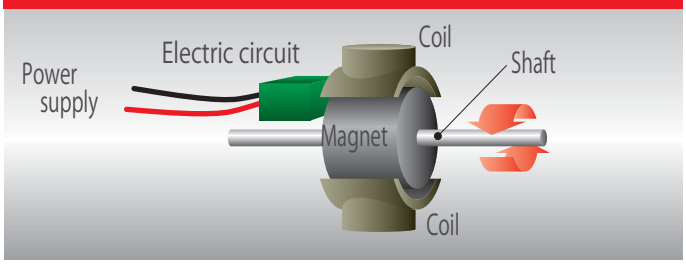

RU / RUP / RS

Revolving Warning Light

CE

Bulb

IP55 (with SZ-210)

Φ82

Optional Rubber Gasket SZ-210

Compact Revolving Warning Light perfectly designed for small devices.

FEATURES

- Indoors allows upright, inverted, and sideways installation; outdoors allows upright installation only.
- Has the CE mark and conforms to the requirements (for 12V, 24V type only) for the EC directive.
- Dome is made from superior impact and heat resistant polycarbonate resin.
- Main body is made of impact and heat-resistant polycarbonate resin.
- Rotating parabolic reflector to enhance visibility from a distance.
- Vibration-resistant automobile bulb for extended bulb life.
- Available Colors are Red, Amber, Green, and Blue.

AVAILABLE BY SPECIAL ORDER

- Body Color: Silver
- Mounting Pole and Bracket: Standard with RUP Series.

How to Order

RU -□-□

Model
RU
RS
RUP

Rated Voltage
12 : DC 12V
24 : DC 24V
100: AC 100V
120: AC 120V
220: AC 220V
240: AC 240V
24AC: AC 24V (Special Order)

Color
R: Red
Y: Amber
G: Green
B: Blue

Dimensions

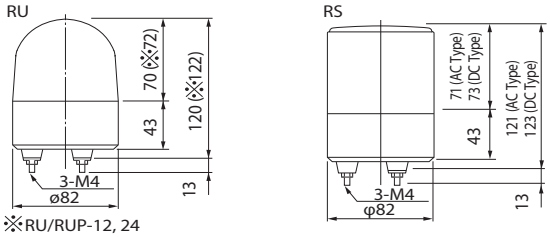

※RU/RUP-12, 24

Mounting Dimensions

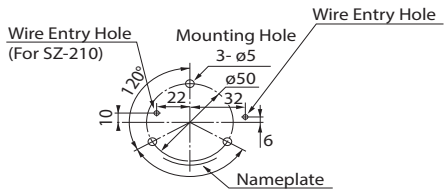

(Unit: mm)

Specifications

Model	Rated Voltage	Current Consumption	Flash Rate (fpm)	Bulb		Mass	
				Ratings	Repl. No.	RU/RS	RUP
RU/RS-12	DC 12V	0.5A	120	12V 6W	18	0.4kg	0.8kg
RU/RS-24	DC 24V	0.3A		24V 6W	19		
RU/RS-100	AC 100V	0.1A		12V 6W	18	0.6kg	1.0kg
RU/RS-120	AC 120V						
RU/RS-220	AC 220V	0.05A					
RU/RS-240	AC 240V						
◎ RU/RS-24AC	AC 24V	0.3A		24V 6W	19	0.4kg	0.8kg

◎ Available by Special Order

Model DEB LED Lamp
Recommended Product
For more details on Model DEB
Refer to the "Replacement Bulb"
Section at the end of this Catalog

RH-A / RK-A

Revolving Warning Light

Optional Rubber Gasket SZ-200A

- Bulb
- IP55 (with SZ-200A)
- 1 Alarm Sound (RHB & RKB)
- 90dB at 1m (RHB & RKB)
- Terminal
- Φ100

Compact Revolving Warning Light featuring high durability and easy wiring with terminal block.

FEATURES

- Indoors allows upright, inverted, and sideways installation; Outdoors allows upright installation only.
- Has the CE mark and conforms to the requirements (for 12V, 24V type only) for the EC directive.
- Dome is made from superior impact and heat resistant polycarbonate resin.
- Main body is made of impact and heat-resistant polycarbonate resin.
- Built-in audible alarm for models RHB/RKB at a sound of 90dB (at 1m).
- Rotating parabolic reflector to enhance visibility from a distance.
- Is UL Listed for 24V, 120V, and 240V types (File No. E215660)
- Vibration-resistant automobile bulb for extended bulb life.
- Available Colors are Red, Amber, Green, and Blue.
- Utilizes a terminal block for easy wiring.

AVAILABLE BY SPECIAL ORDER (RH TYPE)

- Body Color: Silver

How to Order

RK - □ A □ □

- Model: RK-A, RH-A
- Rated Voltage: 12 : DC 12V; 24 : DC 24V; 100: AC 100V; 200: AC 200V
- Conformity: None : Standard; (UL) : UL Conformity
- Color: R: Red; Y: Amber; G: Green; B: Blue

Dimensions

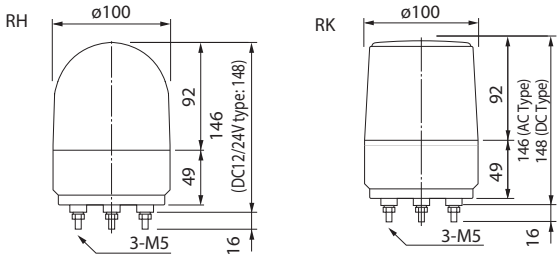

Mounting Dimensions

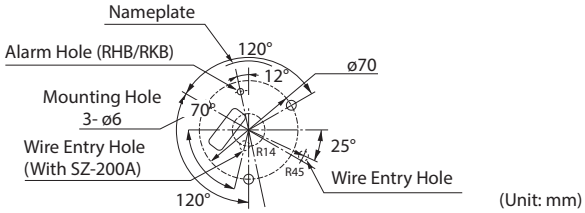

(Unit: mm)

Specifications

Model	Rated Voltage	Current Consumption	Flash Rate (fpm)	Bulb		Mass
				Ratings	Repl. No.	
RH/RHB-12A	DC 12V	0.8A	170	12V 10W	9	400g
RH/RHB-24A (UL)	DC 24V	0.5A		24V 10W	10	
RH/RHB-120A (UL)	AC 120V	0.1A		12V 5W	12	600g
RH/RHB-200A	AC 200V	0.03A				
RH/RHB-240A (UL)	AC 240V	0.05A				
RK/RKB-24A (UL)	DC 24V	0.5A		24V 10W	10	400g
RK/RKB-120A (UL)	AC 120V	0.1A		12V 5W	12	600g
RK/RKB-200A	AC 200V	0.03A				
RK/RKB-240A (UL)	AC 240V	0.05A				

SKH-A

Revolving Warning Light

CE

Model DEB LED Lamp
Recommended Product
For more details on Model DEB Refer to the "Replacement Bulb" Section at the end of this Catalog

ALARM

Bulb

1 Alarm Sound (SKHB)

90dB at 1m (SKHB)

IP56 (SKH-SA, others IP23)

Ø118

Corrosion-proof plastic Revolving Warning Light for a variety of applications.

FEATURES

- Rotating parabolic reflector to enhance visibility from a distance.
- Vibration-resistant automobile bulb for extended bulb life.
- Includes an internal alarm of 90dB (at 1m) that is synchronized with the light operation.
- Upright, inverted, and sideways installation allowed for indoors* as well as outdoors.
- Dome is made from superior weather-resistant and light-translucent acrylic resin.
- Available Colors are Red, Amber, Green, and Blue.
- Has the CE mark and conforms to the requirements (for 12V, 24V type only) for the EC directive.

*SKH-SA installation allows upright and inverted installation only for indoor use.

Specifications

Model	Rated Voltage	Current Consumption	Flash Rate (fpm)	Bulb		Mass
				Ratings	Repl. No.	
SKH-101A/SKHB-12A	DC 12V	0.8A	170	12V 10W	9	400g
SKH-102A/SKHB-24A	DC 24V	0.5A		24V 10W	10	
SKH-110A/SKHB-100A	AC 100V	0.065A		12V 5W	12	600g
SKH-112A/SKHB-120A	AC 120V	0.07A				
SKH-120A/SKHB-200A	AC 200V	0.03A				
SKH-102SA	DC24V	0.5A		24V 10W	10	400kg
SKH-110SA	AC 100V	0.1A		12V 5W	12	600g

How to Order

SKH □-□A-□

- Model
- Alarm: None: Without; B: With
- Rated Voltage: 12 : DC 12V; 24 : DC 24V; 100: AC 100V; 200: AC 200V
- Color: R: Red; Y: Amber; G: Green; B: Blue; P: Purple

Dimensions

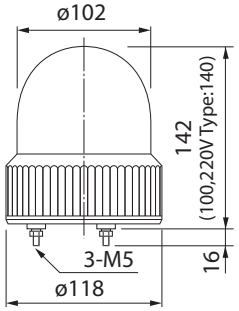

Mounting Dimensions (DC Type)

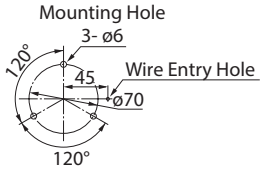

Mounting Dimensions (AC Type)

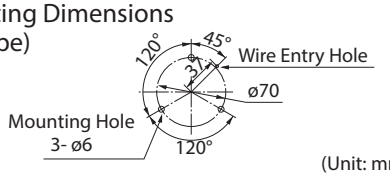

(Unit: mm)

Model DEB LED Lamp
Recommended Product
For more details on Model DEB
Refer to the "Replacement Bulb"
Section at the end of this Catalog

SKH-EA

Revolving Warning Light

CE

Bulb

IP23

Φ100

Best-selling Revolving Warning Light for wide range of applications.

FEATURES

- Indoors allows upright, inverted, and sideways installation; outdoors allows upright installation only.
- Has the CE mark and conforms to the requirements (for 12V, 24V type only) for the EC directive.
- Dome is made from superior weather-resistant and light-translucent acrylic resin.
- Rotating parabolic reflector to enhance visibility from a distance.
- Vibration-resistant automobile bulb for extended bulb life.
- Available Colors are Red, Amber, Green, and Blue.

Specifications

Series	Model	Rated Voltage	Current Consumption	Flash Rate (fpm)	Bulb		Mass
					Ratings	Repl. No.	
USA Version	SKH-12EA	DC 12V	0.8A	170	12V 10W	9	400g
	SKH-24EA	DC 24V	0.5A		24V 10W	10	
	SKH-120EA	AC 120V	0.07A		12V 5W	12	600g
Standard Version	SKH-12EA	DC 12V	0.8A		12V 10W	9	400g
	SKH-24EA	DC 24V	0.5A		24V 10W	10	
	SKH-100EA	AC 120V	0.065A		12V 5W	12	600g
	SKH-200EA	AC 200V	0.03A				

How to Order

SKH- □ **EA-** □

Model

Rated Voltage
12 : DC 12V
24 : DC 24V
100: AC 100V
120: AC 120V
200: AC 200V

Color
R: Red
Y: Amber
G: Green
B: Blue

Dimensions

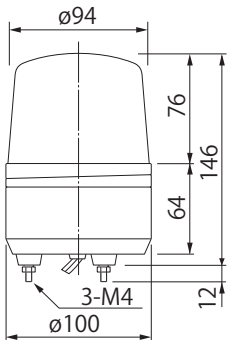

Mounting Dimensions

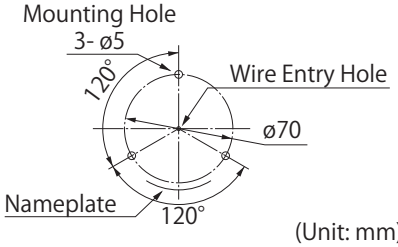

(Unit: mm)

SKP-A

Revolving Warning Light

CE

Bulb

IP23

Φ138

A Revolving Warning Light featuring corrosion-resistance and a stable and silent rotation.

FEATURES

- Main body is made of a melamine baked finish with a corrosion-proof stainless steel (SUS 304) lens mounting fixture.
- Has the CE mark and conforms to the requirements (for 12V, 24V, 48V DC types only) for the EC directive.
- Indoors allows upright, inverted, and sideways installation; outdoors allows upright installation only.
- Dome lens is made of superior impact and heat resistant polycarbonate resin.
- Rotary Mechanism is gear-driven for stable rotation under vibration.
- Available Colors are in Red, Amber, Green, and Blue.

Specifications

Model	Rated Voltage	Current Consumption	Flash Rate (fpm)	Bulb		Mass
				Ratings	Repl. No.	
SKP-101A	DC 12V	2.6A	140	12V 35W	1	0.8kg
SKP-102A	DC 24V	1.2A		24V 35W	2	
SKP-104A	DC 48V	0.8A		48V 35W	5	0.9kg
◎ SKP-110ADC	DC 100V	0.35A		120V 40W	36	
SKP-110A	AC 100V	0.3A				1.0kg
SKP-120A	AC 200V	0.13A	120	220V 30W	37	

◎ Available by Special Order

Dimensions

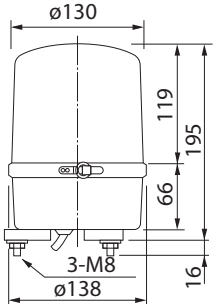

Mounting Dimensions

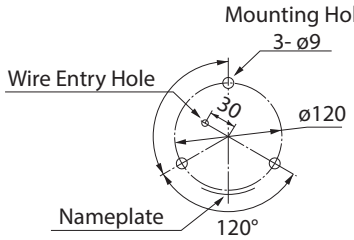

(Unit: mm)

How to Order

SKP- □A-□

Model

Rated Voltage
12 : DC 12V
24 : DC 24V
48 : DC 48V
100 : AC 100V
200: AC 200V
100DC: DC 100V (Special Order)

Color
R: Red
Y: Amber
G: Green
B: Blue

SKL-A

Revolving Warning Light

Bulb

IP23

Φ162

Basic Large-sized Revolving Warning Light with highly durable housing.

FEATURES

- Main body for the SKL-CA has a scratch-free melamine baked finish, and the SKL-SA is of corrosion-proof stainless steel.
- Has the CE mark and conforms to the requirements (for 12V, 24V, 48V DC type only) for the EC directive.
- Indoors allows upright, inverted, and sideways installation; outdoors allows upright installation only.
- Dome is made of a superior impact and heat-resistant polycarbonate resin.
- Available Colors are Red, Amber, Green, and Blue.

Specifications

Model	Rated Voltage	Current Consumption	Flash Rate (fpm)	Bulb		Mass
				Ratings	Repl. No.	
SKL-101CA/101SA	12V DC	2.6A	140	12V 35W	1	1.3kg
SKL-102CA/102SA	24V DC	1.2A		24V 35W	2	
◎ SKL-102ACSA	24V AC					
SKL-104CA	48V DC	0.8A		48V 35W	5	1.4kg
SKL-110CA/110SA	100V AC	0.3A		120V 40W	36	1.5kg
SKL-112SA	120V AC	0.4A				
SKL-120CA/120SA	200V AC	0.13A	120	220V 30W	37	

◎ Available by Special Order

How to Order

SKL- □□ **A-** □

- Model
- Rated Voltage
  - 101 : DC 12V
  - 102 : DC 24V
  - 104 : DC 48V
  - 110 : AC 100V
  - 112 : AC 120V
  - 120 : AC 200V
  - 102AC: AC 24V (Special Order)
- Body
  - CA: Melamine Finish
  - SA: Stainless Steel
- Color
  - R: Red
  - Y: Amber
  - G: Green
  - B: Blue

Dimensions

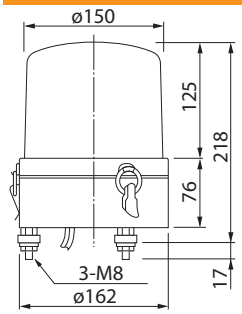

Mounting Dimensions

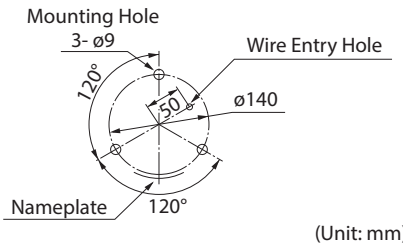

(Unit: mm)

SKC-A

Revolving Warning Light

CE

Bulb

IP23

Φ187

Dual-face Reflector

Large Revolving Warning Light featuring a powerful dual-face reflector flash.

FEATURES

- Extended product lifespan by using vibration-resistance and reliable operation, even under a severely cold environment (-30°C).
- Main body is made of a melamine baked finish with a corrosion-proof stainless steel (SUS 304) lens mounting fixture.
- Indoors allows upright, inverted, and sideways installation; outdoors allows upright installation only.
- Has the CE mark and conforms to the requirements (for 12V, 24V type only) for the EC directive.
- Dome lens is made of superior weather-resistant and light-translucent acrylic resin.
- The rotary mechanism is belt-driven for an extremely quiet and stable rotation.
- Compact motor with high durability and energy-efficient characteristics.
- Available Colors are in Red, Amber, Green, and Blue.
- Dual-face reflector for a powerful rotary flash.

Specifications

Model	Rated Voltage	Current Consumption	Flash Rate (fpm)	Bulb		Mass
				Ratings	Repl. No.	
SKC-201A	12V DC	2.6A	200	12V 35W	1	1.6kg
SKC-202A	24V DC	1.2A		24V 35W	2	
SKC-210A	100V AC	0.3A		120V 40W	36	1.8kg
SKC-212A	120V AC	0.4A				
SKC-220A	200V AC	0.13A	160	220V 30W	37	

How to Order

SKC-□A-□

Model

Rated Voltage
- 201: DC 12V
- 202: DC 24V
- 210: AC 100V
- 212: AC 120V
- 220: AC 200V

Color
- R: Red
- Y: Amber
- G: Green
- B: Blue

Dimensions

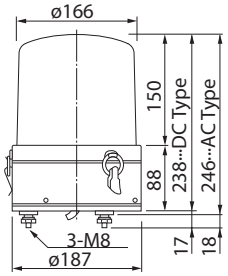

Mounting Dimensions

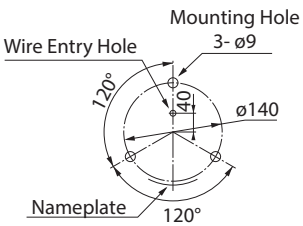

(Unit: mm)

SKV-A

Revolving Warning Light

Bulb

IP66

Φ204

Corrosion-resistant Revolving Warning Light.

FEATURES

- Main body is made of corrosion-resistant aluminum alloy die-cast with a metal cable gland.
- Dome lens is made of superior impact and heat resistant polycarbonate resin.
- Operating Temperature Range is from -30°C to +80°C.
- Allows upright, inverted, and sideways installation.
- Available Colors are in Red and Amber.

Specifications

Model	Rated Voltage	Current Consumption	Flash Rate (fpm)	Bulb		Mass
				Ratings	Repl. No.	
SKV-101A	12V DC	2.6A	140	12V 35W	1	2.6kg
SKV-102A	24V DC	1.2A		24V 35W	2	
SKV-110A	100V AC	0.3A		120V 40W	36	2.8kg
SKV-120A	200V AC	0.13A	120	220V 30W	37	

How to Order

SKV- □ **A-** □

Model

Rated Voltage
201: DC 12V
202: DC 24V
210: AC 100V
220: AC 200V

Color
R: Red
Y: Amber

Dimensions

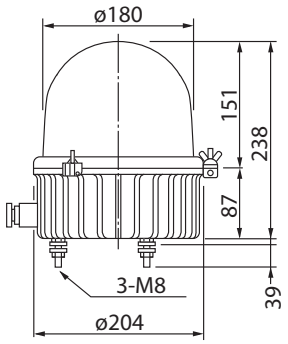

Mounting Dimensions

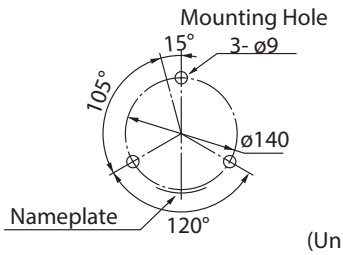

(Unit: mm)

SKHB-1006D

Revolving Warning Light

Bulb

1 Alarm Sound

IP23

Φ162

Portable

Portable Revolving Warning Light with dry cell batteries.

FEATURES

- Built-in operation-selectable alarm with external switch for light rotation only, or with buzzer and light rotation (solenoid buzzer sound).
- Contains five (5) SUM-1 batteries for 4 hours of operation, or five (5) LR20 for about 15 hours.
- Dome is made of superior weather-resistant and light-translucent acrylic resin.
- The 1006MA type includes a powerful magnet for secure placement.
- Installation is for the upright position only.
- Available Colors are Red and Amber.

Specifications

Model	Rated Voltage	Power Consumption	Flash Rate (fpm)	Bulb		Mass
				Ratings	Repl. No.	
SKHB-1006D	DC6V (SUM-1x5)	3W	170	6V 3W	8	2.0kg
SKHB-1006MD						2.1kg

How to Order

SKHB-1006□D-□

- Model
- Magnet Base: None: Without, M: With
- Color: R: Red, Y: Amber

Dimensions

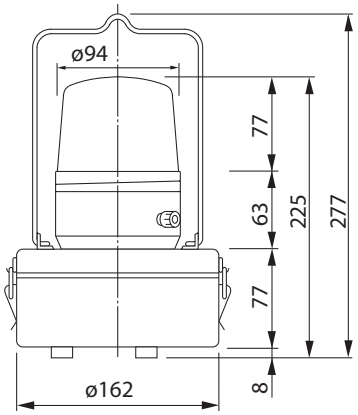

Mounting Dimensions

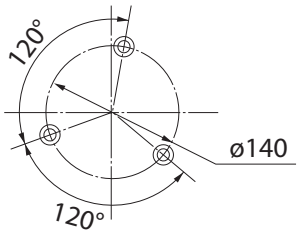

(Unit: mm)

KP-A

Revolving Warning Light

CE

Bulb

IP23

Φ162

Corrosion-proof plastic Revolving Warning Light for a wide range of applications.

FEATURES

- Extended product lifespan by using vibration-resistance and reliable operation, even under a severely cold environment (-30°C).
- Indoors allows upright, inverted, and sideways installation; outdoors allows upright installation only.
- Has the CE mark and conforms to the requirements (for 24V type only) for the EC directive.
- Dome lens is made of superior weather-resistant and light-translucent acrylic resin.
- Mounting Bolts are drip-proof and made of rust-free stainless steel.
- Rotating parabolic reflector to enhance visibility from a distance.
- Main Body is made of special UV and water-resistant resin.
- Available Colors are Red, Amber, Green, and Blue.

Specifications

Model	Rated Voltage	Current Consumption	Flash Rate (fpm)	Bulb		Mass
				Ratings	Repl. No.	
KP-24A	24V DC	1.2A	140	24V 35W	2	1.0kg
KP-100A	100V AC	0.3A		120V 40W	6	1.2kg
KP-120A	120V AC	0.4A				
KP-200A	200V AC	0.13A	120	220V 30W	37	

How to Order

KP- □ A- □

Model

Rated Voltage
24 : DC 24V
100: AC 100V
120: AC 120V
200: AC 200V

Color
R: Red
Y: Amber
G: Green
B: Blue

Dimensions

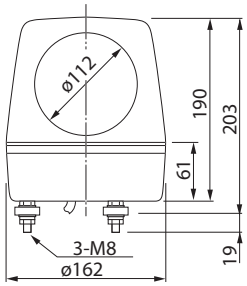

Mounting Dimensions

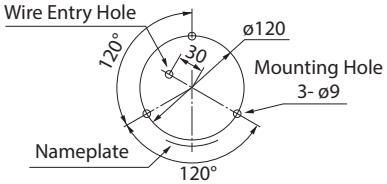

(Unit: mm)

WH-A / WK-A

Revolving Warning Light

CE

ALARM

Model DEB LED Lamp
Recommended Product
For more details on Model DEB
Refer to the "Replacement Bulb"
Section at the end of this Catalog

WH-A

WK-A

Bulb

1 Alarm Sound (WHB-A Only)

90dB at 1m (WHB-A Only)

IP54

Φ100

Easily attachable to an electrical box with easy wiring to a terminal block.

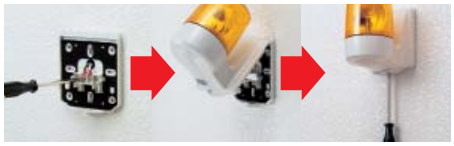

Install in various directions when using for indoor applications.

- Sideways
- Upside-down

When installing the WHB, direct the buzzer in a downward direction.

Wall-mount Revolving Warning Light featuring easy wiring with terminal block.

FEATURES

- Has the CE mark and conforms to the requirements (12V, 24V type only) for the EC directive.
- Upright, inverted, and sideways installation allowed for indoors as well as outdoors*.
- Dome is made from superior weather-resistant and light-translucent acrylic resin.
- Rotating parabolic reflector to enhance visibility from a distance.
- Compact motor with high durability and energy-efficient characteristics.
- Vibration-resistant automobile bulb for extended bulb life.
- Main body is made of impact and heat resistant ABS resin.
- Available Colors are Red, Amber, Green, and Blue.
- Uses a terminal block for easy wiring.

*WHB installation is upright only for outdoor use.

Dimensions

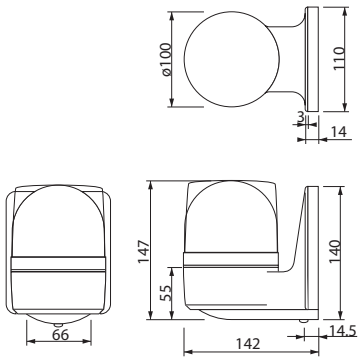

Mounting Dimensions

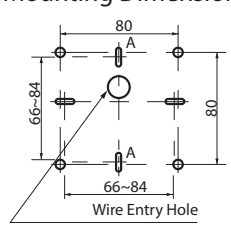

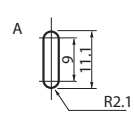

(Unit: mm)

How to Order

WK□-□A□

Model
WK-A
WH-A

Alarm
None: Without
B: With

Rated Voltage
12 : DC 12V
24 : DC 24V
100: AC 100V
120: AC 120V
200: AC 200V

Color
R: Red
Y: Amber
G: Green
B: Blue

Specifications

Model	Rated Voltage	Current Consumption	Flash Rate (fpm)	Bulb Ratings	Bulb Repl. No.	Mass
WK-12A	DC 12V	0.8A	170	12V 10W	9	550g
WH-24A	DC 24V	0.5A		24V 10W	10	
WK-24A						
WH-100A	AC 100V	0.07A		12V 5W	12	750g
WK-100A						
WH-120A	AC 120V	0.08A				
WK-120A						
WH-200A	AC 200V	0.04A				
WK-200A						
WKB-12A	DC 12V	0.85A		12V 10W	9	550g
WHB-24A	DC 24V	0.5A		24V 10W	10	
WKB-24A						
WHB-100A	AC 100V	0.07A		12V 5W	12	750g
WKB-100A						
WHB-120A	AC 120V					
WKB-120A						
WHB-200A	AC 200V	0.04A				
WKB-200A						

HP

Revolving Warning Light

Halogen

Φ182

Large Revolving Warning Light with a solid design.

FEATURES

- Dome is made from superior weather-resistant and light-translucent acrylic resin.
- Main body is made of impact and heat resistant ABS resin.
- Available Voltages are DC 12V and DC 24V.
- Available Colors are Red, Amber, and Blue.
- Utilizes a Halogen Bulb (Sold Separately).

Specifications

Model	Rated Voltage	Halogen Bulb Bulb sold seperately	Flash Rate (fpm)	Mass
◎ HP-12	12V/24 DC	0.5A	160	1.0kg
◎ HP-24				

◎ Available by Special Order

How to Order

HP-□□

Model

Rated Voltage
12 : DC 12V
24 : DC 24V

Color
R: Red
Y: Amber
B: Blue

Dimensions

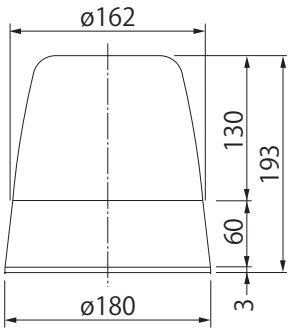

Mounting Dimensions

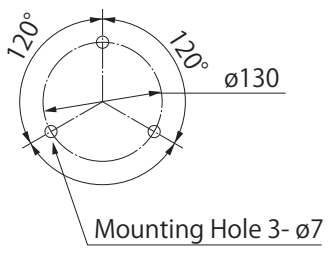

(Unit: mm)

KG

Revolving Warning Light

Bulb

IP23

Φ186

Dual-face Reflector

Large lightweight Revolving Warning Light with dual-face reflector.

FEATURES

- Indoors allows upright, inverted, and sideways installation; outdoors allows upright installation only.
- Main Body is made of a black resin for resistance against harsh weather and UV rays.
- Compact motor with high durability and energy-efficient characteristics.
- The red dome is made of AS resin; the amber dome is made of PS resin.
- Dual-face reflector for a powerful rotary flash.
- Available Colors are in Red and Amber.

*Please contact your local PATLITE representative for other available voltages.

Specifications

Model	Rated Voltage	Current Consumption	Flash Rate (fpm)	Bulb		Mass
				Ratings	Repl. No.	
KG-12	DC 12V	2.7A	180	12V 35W	1	700g
KG-24	DC 24V	1.2A		24V 35W	2	
KG-100	AC 100V	0.32A		120V 40W	36	900g

How to Order

KG-□□

Model

Color
R: Red
Y: Amber

Rated Voltage
12 : DC 12V
24 : DC 24V
100: AC 100V

Dimensions

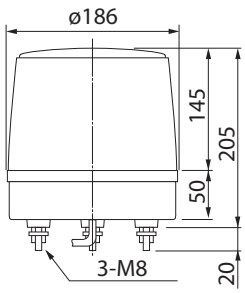

Mounting Dimensions

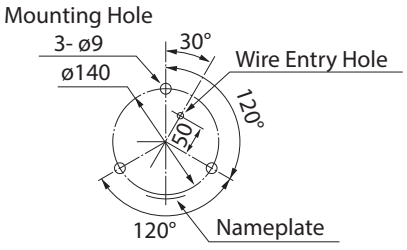

(Unit: mm)

HKFM

Revolving Warning Light

Halogen

Compact revolving warning light with cigar lighter plug to attach onto your car for road service.

FEATURES

- Large-sized rotating parabolic reflector to enhance visibility from a distance.
- Cigar lighter plug with a 4m cable for easy power connection.
- Available Colors are in Red, Amber, Green, and Blue.
- Rim-drive motor for a quiet and stable rotation.
- Dome lens is made of polycarbonate resin.

Specifications

Model	Rated Voltage	Current Consumption	Flash Rate (fpm)	Bulb	Mass
HKFM-101	DC 12V	2.9A	230	12V 35W	800g
HKFM-102	DC 24V	1.9A		24V 55W	

How to Order

HKFM □ - □

- Model
- Rated Voltage
  - 101 : DC 12V
  - 102 : DC 24V
- Color
  - R: Red
  - Y: Amber
  - G: Green
  - B: Blue

Dimensions

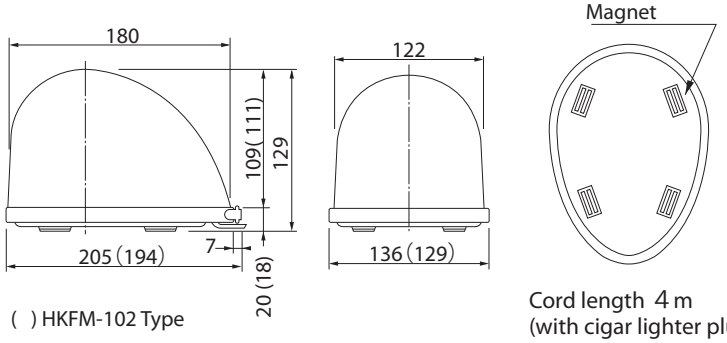

( ) HKFM-102 Type

Cord length 4 m
(with cigar lighter plug)

(Unit: mm)

RLR

LED Revolving Warning Light

RoHS CE

LED

Φ162

IP66

Ideal for forklift, material handling equipment and a great variety of applications.

FEATURES

- Has the CE mark and conforms to the requirements (for 12V, 24V, 48V type) for the EC directive.
- Colors available are Red, Amber, Green, and Blue.
- RLR complies with the RoHS Directive.

LED + Brushless Motor + Bearing Mechanism

■ Long Life

The RLR has many advantages in comparison to a rotating beacon using incandescent bulbs and the conventional motor. The LED will last approximately 20 to 40 times longer than an incandescent bulb, and in combination with a brushless motor with bearings, allows the RLR to operate from 8,000 hrs to 10,000 hrs, compared to 5,000 hrs for other rotating beacons.

Conventional Motor Construction

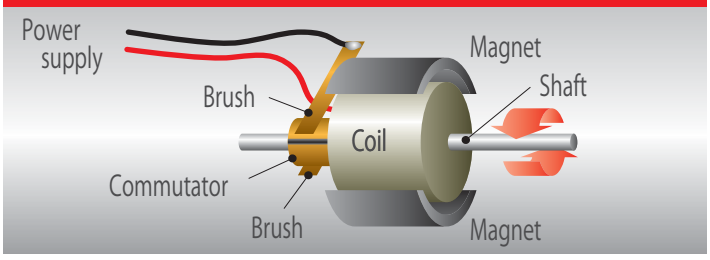

Brushless Motor Construction

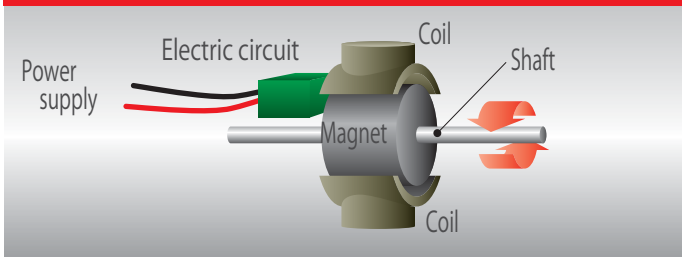

Vibration Resistance*

High Visibility

High Protection

IP66 TEST PROCEDURE

IPX6= Water is sprayed for at least 3 minutes at a flow rate of 100 L/min from a distance between 2.5m to 3.0m, and from all 360°directions using a 12.5mm diameter jet hose nozzle.

IP6X= The target unit is tested under-pressure in a dust chamber for 8 hours.

How to Order

Model Code RLR-04-P-R

Rated Voltage
04 : DC 48V
M1 : DC 12-24V
M2 : AC 90~250V

Color
R : Red G : Green
Y : Amber B : Blue

Mounting Dimensions
Blank : φ140
P : φ120

Typical Vibration Values

2G (19.6m/s^2)

Passenger Car

4.5G (44.1m/s^2)

Construction Machinery

7G (68.6m/s^2)

Emergency Vehicle

11G (107.8m/s^2)

Dump Trucks

Dimensions

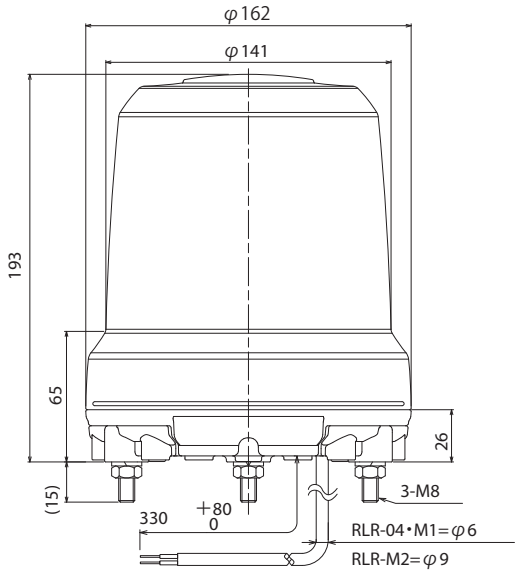

Mounting Dimensions

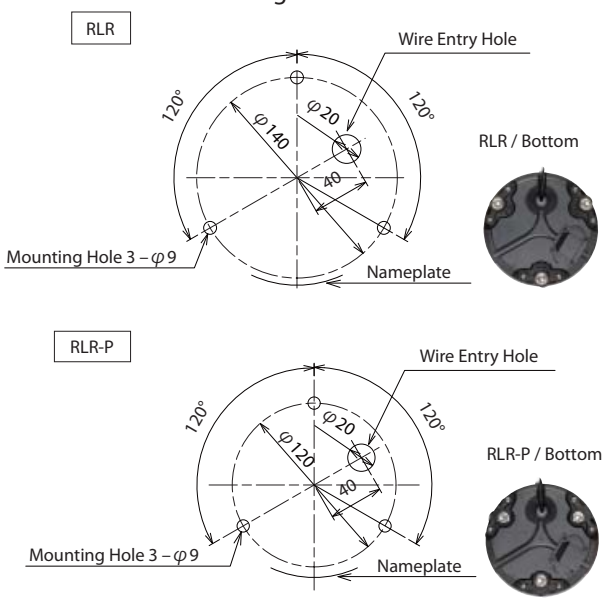

(Unit: mm)

Specifications

Model	Rated Voltage	Operating Voltage Range	Vibration Resistance	Operating Temperature Range	Dome	Mass
RLR-M1	DC 12-24V	DC 9.5V - 15V	110m/s^2 (11G)	-30 C - +70 C	-R (Red) -Y (Amber) -G (Green) -B (Blue)	1.0kg
RLR-04	DC 48V	DC 20V - 30V				
RLR-M2	AC 90-250V	AC 90V - 250V	45m/s^2 (4.5G)	-10 C - +50 C		1.06kg

KUS

Cube Tower

RoHS

LED

Bulb

1 Alarm Sound

80db at 1m

IP54 (Except KUS-B)

□70

The KUS Series cube tower; uses advanced technology with a modular design to combine two different lights on one unit.

FEATURES

- Light modules can be stacked up to 4 tiers in any color combination.
- RoHS Compliance for Models KUS-24, KUS24F, KUS-EA-R/Y/G/B/C.
- Lenses are made of heat and shock resistant polycarbonate resin.
- Each light has a built-in dip switch to control the light on or off.
- Maximum power consumption of the base unit is 21 watts.
- Light and Base units are sold separately.
- IP rating of IP54 (Except the KUS-B)
- KUS-F flashes 60 times a minute.

How to Order

Power Unit

KUS-□-□

Model

Rated Voltage
24 : AC/DC 24V
100: AC 100V
120: AC 120V
220: AC 220V

Lighting Type
None: Continous
F : Continous or Flashing
C : Open Collector Continous
FC : Open Collector Continuous or Flashing

Module

KUS-□

Model

Module Type
S : Bulb Type
EA: LED Type
B : Buzzer Type

Specifications

Power Unit	Model	Rated Voltage	Power Consumption	(Image)
Continuous Lighting	KUS -24	AC/DC 24V	21W	
	KUS -100	AC 100V		
	KUS -120	AC 120V		
	KUS -220	AC 220V		
Continuous Lighting or Flashing	KUS -24 F	AC/DC 24V		
	KUS -100 F	AC 100V		
	KUS -120 F	AC 120V		
	KUS -220 F	AC 220V		
Open-Collector Continuous Lighting	KUS -24 C	AC/DC 24V		
	KUS -100 C	AC 100V		
	KUS -120 C	AC 120V		
	KUS -220 C	AC 220V		
Open-Collector Continuous Lighting or Flashing	KUS -24 FC	AC/DC 24V		
	KUS -100 FC	AC 100V		
	KUS -120 FC	AC 120V		
	KUS -220 FC	AC 220V		

Model	Rated Voltage	Power Consumption	Bulb	
			Ratings	Repl. No.
KUS-S (Bulb)	DC 24V	6W	24V 6W	19
KUS-EA (LED)		R,Y: 1.2W; G,B,C: 0.9W	—	—

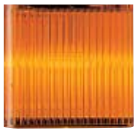

Model	Rated Voltage	Power Consumption	Volume
KUS-B	DC 24V	0.5W	80dB (at 1m)

Dimensions

Height*
1 Tier: 166
2 Tiers: 232
3 Tiers: 298
4 Tiers: 364

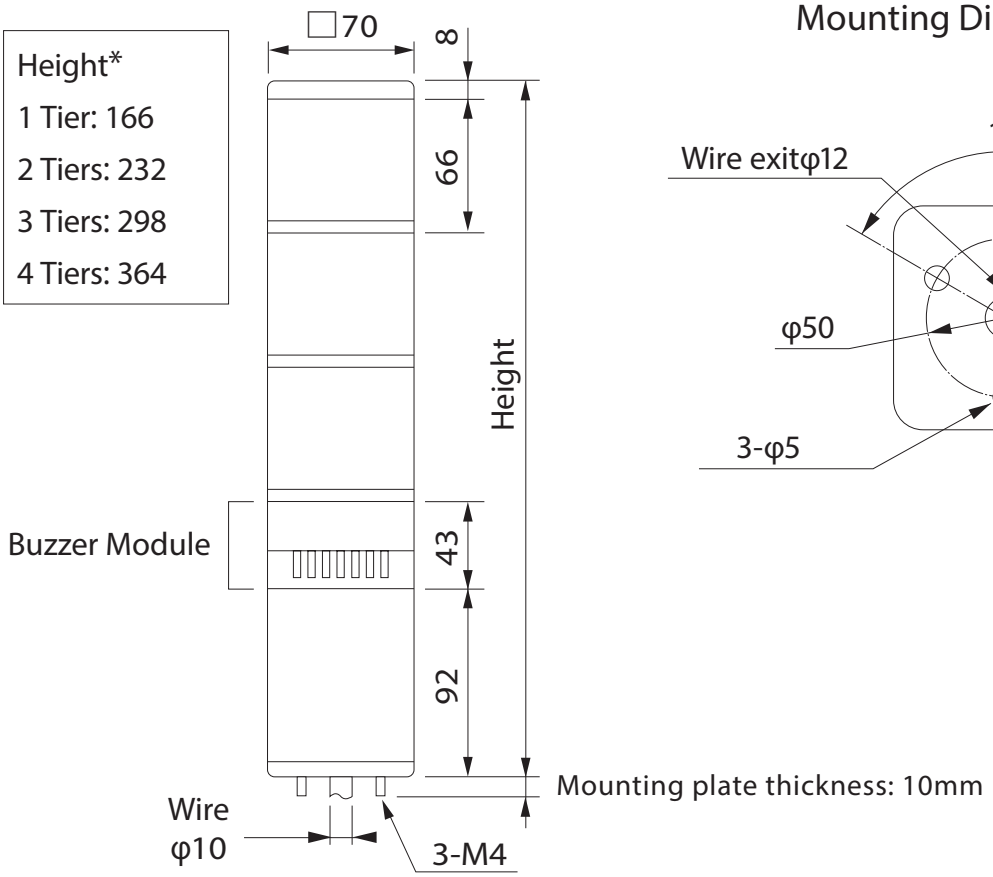

* Buzzer module height not included

Mounting Dimensions

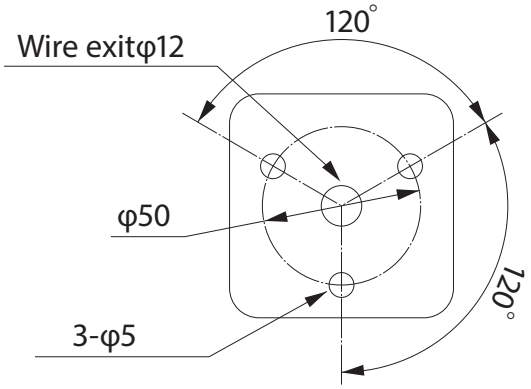

(Unit: mm)

Wiring

Contact Input Type
(KUS,KUS-F)

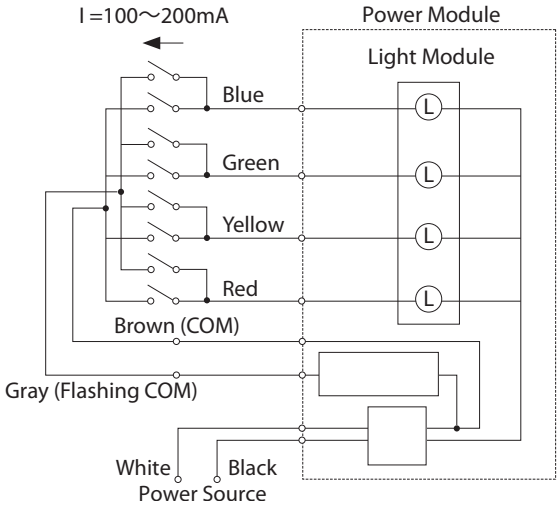

Open-collector Type
(NPN/PNP for KUS-FC,C)

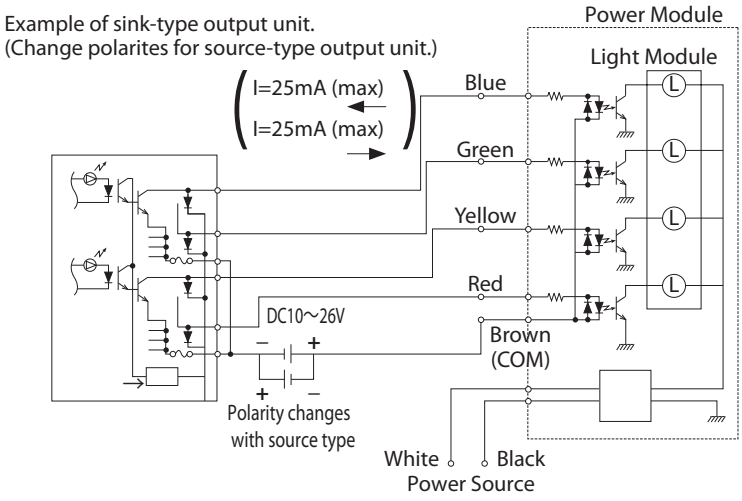

KJS / KJSB

Cube Tower

ALARM

Model DEB LED Lamp
Recommended Product
For more details on Model DEB
Refer to the "Replacement Bulb"
Section at the end of this Catalog

Bulb

1 Alarm Sound

85dB at 1m (KJSB)

IP23

□82

NPN/PNP
Open-collector

Lightweight Cube Tower featuring a built-in buzzer designed to fit applications for small equipment.

FEATURES

- Built-in Alarm with intermittent buzzer sound and volume of up to 85dB (at 1m).
- Lens is made of superior weather-resistant and light-translucent AS resin.
- Rotating parabolic reflector to enhance visibility from a distance.
- Main body is made of impact and heat resistant ABS resin.
- Available colors are Red, Amber, Green, and Blue.
- Installation is in the upright position only.
- Flashing cycle of 160 times/min.
- One spare bulb is included.

How to Order

KJSB-302-RYG

Type
B: With audible alarm

Tiers
1~3

Rated Voltage
01: DC 12V
02: DC 24V
10: AC 100V
12: AC 120V
20: AC 220V

Color
R: Red
Y: Amber
G: Green
B: Blue
(Top to bottom)

Dimensions

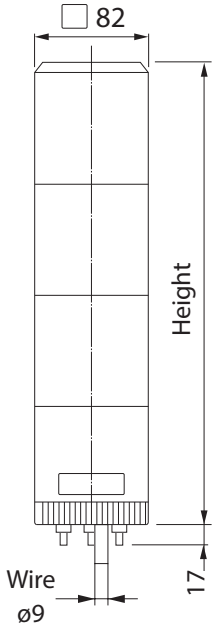

Height
1 Tier : 173
2 Tiers: 256
3 Tiers: 339

Mounting Dimensions

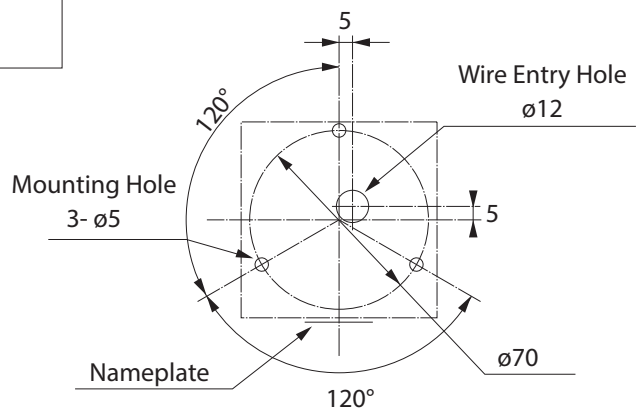

(Unit: mm)

Wiring

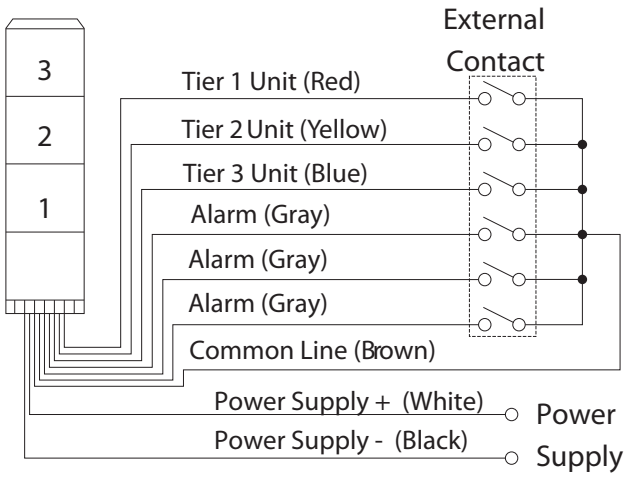

NPN Open-collector Transistor

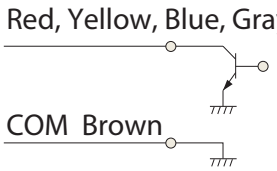

Current Consumption and Contact Capacity per Module				
Rated Voltage	Lamp Wire Current	Alarm Wire Current	Lamp Wire Contact Capacity	Alarm Wire Contact Current
DC 12V	34mA	100mA	50mA or more	300mA or more
DC 24V				
AC 100V				
AC 120V				
AC 200V				

- Θ DC Inputs are polarized.
- Θ Only the KJSB has Gray wires for alarm input.

Specifications

Stack Number	Model			Rated Voltage	Power Consumption	Flash Rate (fpm)	Bulb	
							Ratings	Repl. No.
1 Tier	KJS	KJSB	-101	DC 12V	6W	160	12V 5W	12
			-102	DC 24V	12W		24V 10W	10
			-110	AC 100V	8W		12V 5W	12
			-112	AC 120V				
			-120	AC 200V				
2 Tiers	KJS	KJSB	-201	DC 12V	11W		12V 5W	12
			-202	DC 24V	24W		24V 5W	10
			-210	AC 100V	16W		12V 5W	12
			-212	AC 120V				
			-220	AC 200V				
3 Tiers	KJS	KJSB	-301	DC 12V	16W		12V 10W	9
			-302	DC 24V	35W		24V 10W	10
			-310	AC 100V	23W		12V 5W	12
			-312	AC 120V				
			-320	AC 200V				

KJ /KJB

Cube Tower

Model DEB LED Lamp
Recommended Product
For more details on Model DEB Refer to the "Replacement Bulb" Section at the end of this Catalog

Bulb

1 Alarm Sound

85dB at 1m (KJB)

IP23

□116

Lightweight Cube Tower featuring a built-in buzzer suitable for various indoor applications.

FEATURES

- Built-in Alarm with intermittent buzzer sound and volume of up to 85dB (at 1m).
- Lens is made of superior weather-resistant and light-translucent AS resin.
- Rotating parabolic reflector to enhance visibility from a distance.
- Main body is made of impact and heat resistant ABS resin.
- Available colors are Red, Amber, Green, and Blue.
- Installation is in the upright position only.
- Flashing cycle of 130 times/min.
- One spare bulb is included.

How to Order

KJB-302-RYG

- Type: B: With audible alarm
- Tiers: 1~4
- Rated Voltage: 02: DC 24V; 10: AC 100V; 12: AC 120V; 20: AC 220V
- Color: R: Red, Y: Amber, G: Green, B: Blue (Top to bottom)

Specifications

Stack Number	Model			Rated Voltage	Power Consumption	Flash Rate (fpm)	Bulb	
							Ratings	Repl. No.
1 Tier	KJ	KJB	-102	DC 24V	13.5W	130	24V 10W	10
			-110	AC 100V	6W		12V 5W	12
			-112	AC 120V	7W			
			-120	AC 200V	5.5W			
2 Tiers	KJ	KJB	-202	DC 24V	25.54W		24V 5W	10
			-210	AC 100V	11W		12V 5W	12
			-212	AC 120V	13W			
			-220	AC 200V	9.9W			
3 Tiers	KJ	KJB	-302	DC 24V	37.5W		24V 10W	10
			-310	AC 100V	16W		12V 5W	12
			-312	AC 120V	18W			
			-320	AC 200V	14.3W			
4 Tiers	KJ	KJB	-402	DC 24V	49.5W		24V 10W	10
			-410	AC 100V	21W		12V 5W	12
			-412	AC 120V	26W			
			-420	AC 200V	18.7W			

Dimensions

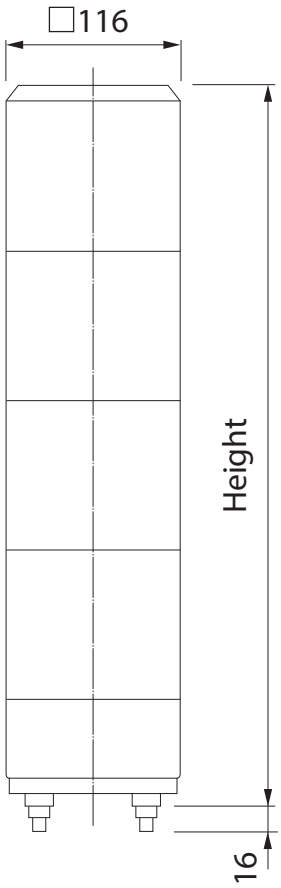

Height
1 Tier : 185
2 Tiers: 290
3 Tiers: 395
4 Tiers: 500

Mounting Dimensions

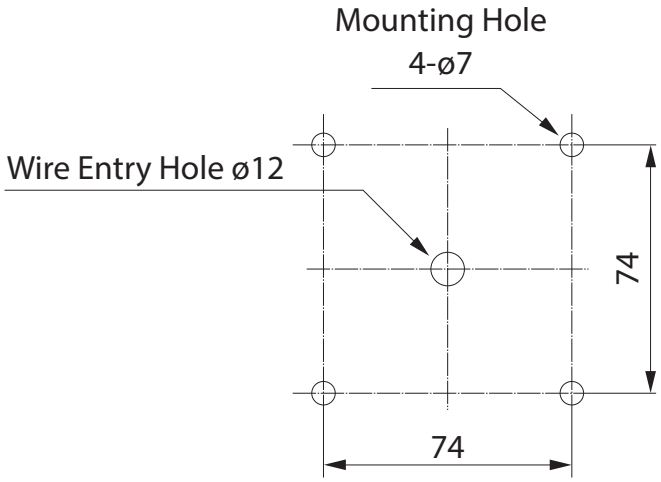

(Unit: mm)

Wiring Diagram

KJ/KJB (24V DC)

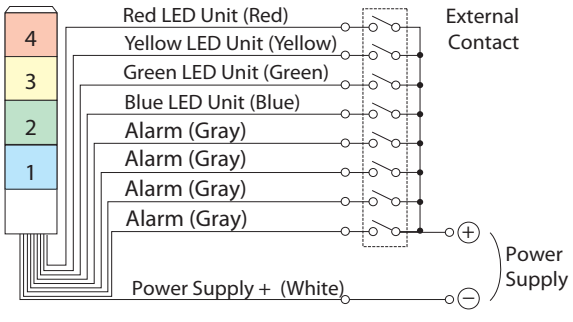

KJ/KJB (100V AC, 220V AC)

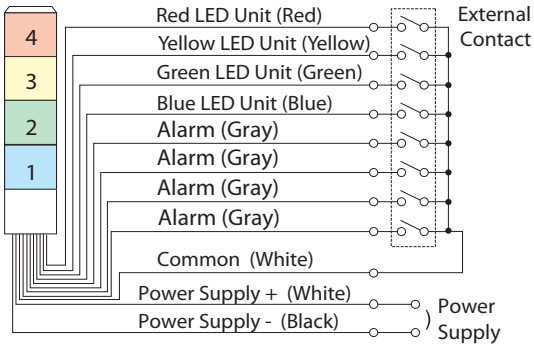

Θ KJ-110/112/120 are voltage-contact type, therefore have no alarm signal wires.
Θ Only the KJB has Gray wires for alarm input.

Current Consumption and Contact Capacity per Module					
Rated Voltage	Signal Wire Current	Inrush Current	External Contact Capacity	Alarm Wire Current	Alarm Wire Inrush Current
24V DC	0.42A	4.6A	5A or more	60mA	500mA
100VAC/120VAC/220VAC					

MEMO

For more details, visit our website at http://www.patlite.com

LED Light

CLA

LED Light Bar

Daylight, Amber
Natural White

IP66G/67G/69K

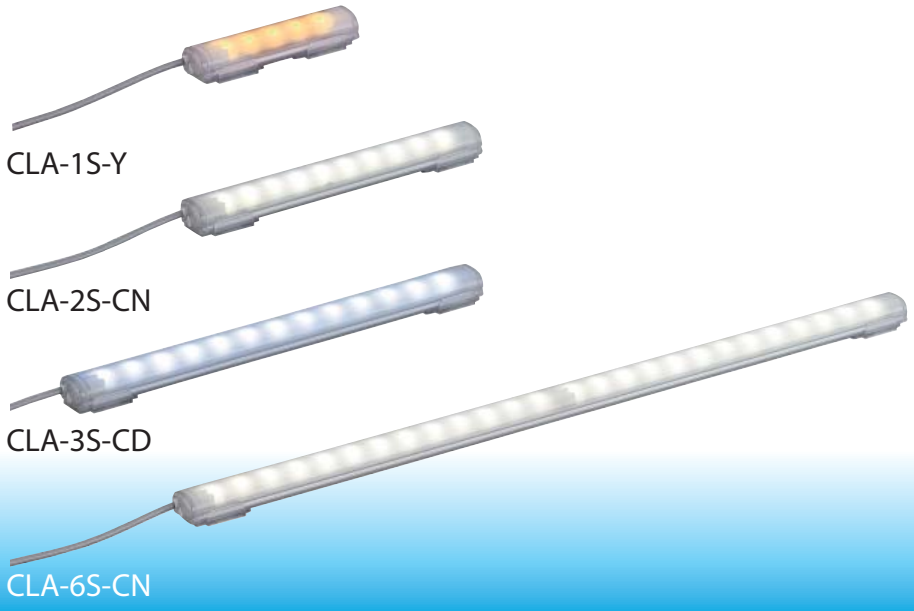

More than a diffusion LED light bar, it can be used in places like the food-processing industry with its protection rating of "IP69K", which can endure high-pressurized hot water washing.

- Bright, long lasting LED's.
- Suitable for food, beverage and pharmaceutical applications where high-pressure, 80°C high-temperature wash-downs are required. Also meets IP66/67 standards.
- The radiating temperature is reduced to 40 degrees or less (34% reduction in comparison to a 20W fluorescent light), increasing environmental efficiency.
- Seven lengths in the range from 100 to 1500mm to choose from, with three colors (Daylight, Natural White, Amber), and four types of attachments, including a magnet one, offering a potential for various applications.
- The operating temperature range from -40°C to +60°C allows installation in sub-freezing temperatures, such as walk-in freezers.
- It is constructed with strong polycarbonate resin, which is resistant to shock.
- Corresponds to Europe's RoHS Directive.
- Obtained certification for ECOLAB.
- Conforms to CE requirements.
- UL Listed (File No. E306141).

Lumionous Color

With a high-intensity Illumination, it is suitable for applications such as lighting-up processing machinery workspace or video inspection systems to help highlight more details, etc.

A 6800K daylight light bar at a distance of 50 cm from the center of irradiation has measured a maximum brightness of 400lx.

CLA-CN (Natural White: 4800K)

CLA-CD (Daylight:6800K)

CLA-Y (Amber)

How to Order

CLA1S-24-CD-30

Light Bar Length
1 : 100mm
2 : 200mm
3 : 300mm
6 : 600mm
9 : 900mm
12: 1,200mm
15: 1,500mm

Luminous Color
-CD (Daylight)
-CN (Natural White)
-Y (Amber)

Cable Length
Blank : 0.5m
30 : 3.0m

※ -Y is only available in 100mm and 300mm lengths.

Dimensions

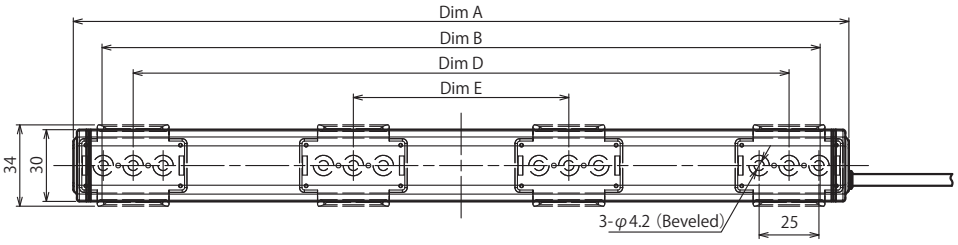

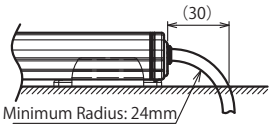

Wiring Example

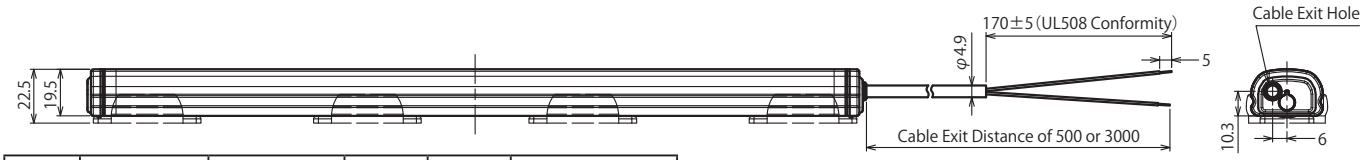

Model Name	Dim A	Dim B	Dim D	Dim E	Standard Bracket SZ-310AR
	Total Length	Lighting Area	Mounting Pitch		
CLA1S	124	100	74	—	2 pcs.
CLA2S	224	200	174	—	
CLA3S	324	300	274		
CLA6S	624	600	574		
CLA9S	924	900	874	290	4 pcs.
CLA12S	1,224	1,200	1,174	390	
CLA15S	1,524	1,500	1,474	490	

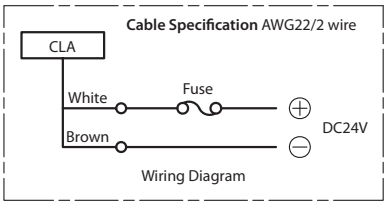

Options

Rear Attachment
(Screw Mount)
Model SZ-310AR

Rear Attachment
(Magnetic Mount)
Model SZ-310ARM

Side Attachment
(Screw Mount)
Model SZ-310AS

Side Attachment
(CLB-24N Compatible)
Model SZ-310ASB

Specifications

Model	Luminous Color	Rated Voltage	Vibration Resistance	Operating Temperature Range	Rated Current Consumption	Center Radiation (lx/50cm)	Main Body Material	Protection Rating	Mass
CLA1S -24 -CD	Daylight	DC 24V (Polarized)	19.6 m/s^2	-40°C - +60°C (RH 90% or less)	104mA	140	Polycarbonate	IP66/67/69K	80g
CLA1S -24 -CN	Natural White								
CLA1S -24 -Y	Amber					78			
CLA2S -24 -CD	Daylight				208mA	270			130g
CLA2S -24 -CN	Natural White								
CLA3S -24 -CD	Daylight				240mA	400			180g
CLA3S -24 -CN	Natural White								
CLA3S -24 -Y	Amber					220			
CLA6S -24 -CD	Daylight				480mA	650			340g
CLA6S -24 -CN	Natural White								
CLA9S -24 -CD	Daylight				720mA	810			500g
CLA9S -24 -CN	Natural White								
CLA12S -24 -CD	Daylight				960mA	890			660g
CLA12S -24 -CN	Natural White								
CLA15S -24 -CD	Daylight				1,200mA	945			820g
CLA15S -24 -CN	Natural White								

CLK

LED Light Bar

Daylight
Natural White

IP66G/67G/69K

M-12 Daisylink

(Cable not included)

Water, Oil and Chemical Resistant LED Light Bar with an Illuminance of 2,100lx. (Measurement based on CLK6S-24AG-CD)

FEATURE

- Attained the IP69K standard for the meat/food processing, beverages and medicine manufacturing industries which demands the waterproofing performance. It also corresponds to IP66G/67G standards.
- Special design to reduce "Blinding Light" effect, reducing the risk of retinal damage (EN62471-2 for Photobiological Safety of Lamps and Lamp Systems).
- The product lineup includes three sizes (200mm, 300mm, 600mm), two colors (Daylight, Natural White), and different series (Side-exit Cable; M12 Quick-disconnect; Aluminum Alloy and Stainless Steel Body) for various applications.
- The operating temperature range from -40°C to +60°C allows installation in sub-freezing temperatures, such as walk-in freezers.
- Slim Profile
- Corresponds to Europe's RoHS Directive.
- Conforms to CE requirements.
- UL Listed (File No. E306141).

Specifications

Specifications/Material		Water and Oil Resistance/Aluminum Alloy							Water and Chemical Resistance/ SUS316 Stainless Steel	
Lens Material		Tempered Glass							Specially-treated Lens◊	
Model		2S-AG	3S-AG	6S-AG	3C-AG	3CL-AG	6C-AG	6CL-AG	3C-SG	3C-SA
Lens Size		200mm	300mm	600mm	300mm		600mm		300mm	
LED Color	Daylight: 6,500K: CD	●	●	●	●	●	●	●	●	—
	Natural White: 5,000K: CN	△	●	△	●	●	●	—	—	●
Center Illumination (@1m)		820lx	1,200lx	2,100lx	1,200lx		2,100lx		1,200lx	
Connection Type		Side-exiting Cable, L=0.5m			M12 Quick Disconnect	M12 Daisy Link	M12 Quick Disconnect	M12 Daisy Link	M12 Quick Disconnect	
Power Consumption		8.4W	12.5W	25W	12.5W		25W		12.5W	
Rated Voltage		DC 12V (Poloarized)								
Operating Temperature Range		-40°C - +60°C (RH 90% or less)								
Protection Rating		IP 66G/67G (IEC 60529)/IP69K (DIN 40050 Part 9)								

△ : Inquire before Ordering ◊: Specially-treated lens has three layers embedded; PMMA, Shatter-proof Film, Tempered Glass

How to Order

Model Code

Model CLK□□-24□-□

Illumination Area Size
2: 200mm 3: 300mm 6: 600mm

Wiring Method
S: Side-exiting Cable C: M12 Cable CL: M12 Daisy Link

LED Color
CD: Daylight, CN: Natural White

Body Material AG: Aluminum & Glass
SG: Stainless Steel & Glass
SA: Stainless Steel & Special Lens

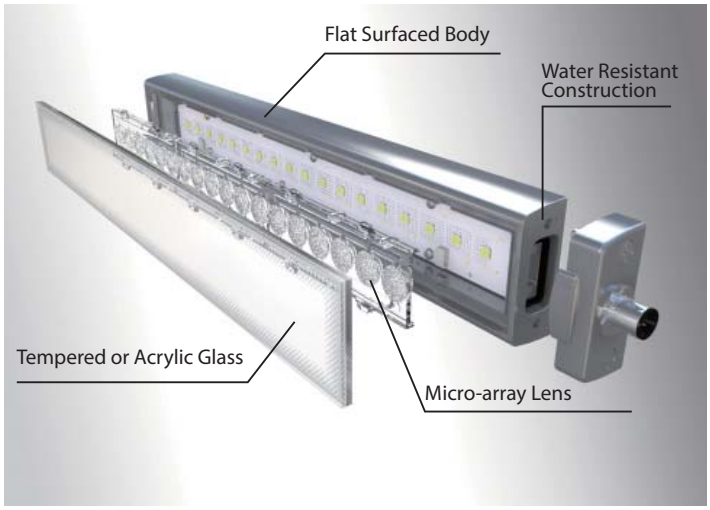

Angled Body and Flat Surface

The side body angle was designed to prevent dirt accumulation, and for water and oil to roll off the surface. The LED lens retains a simple flat-surface for lighting and to help when wiping it down.

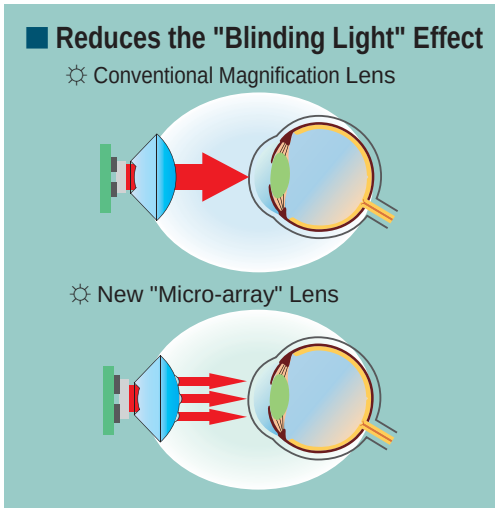

Reduces the "Blinding Light" Effect

This design conforms to the Photobiological Safety of Lamps and Lamp Systems (Compliance :EN62471- 2) in the Exempt Risk Group, which determines that no immediate retina damage is done.

One-touch Installation

Just sliding the body onto the bracket makes attachment easy; and it locks in place with a locking screw (which is hidden from the front). (Aluminum Body Only)

Angle Adjustment Bracket

The Worklight can be freely adjusted up to 60° up and down from the center. (With a scale at 10° step marks and screws to lock it into place.)

Surface-mounting Bracket

A space-saving flush-mount bracket. (Limited board thickness and lead wire specification of 6mm or less; M12 connector specification of 3mm or less) (Models 3 S-AG/3 C-AG Only)

CLK-001

SZ-320KS

SZ-330KP

M12 Quick Disconnect

4-wire M12 Socket Cable, 5m (No. 1536308)
4-wire M12 SUS Socket Cable, 5m (No. 1552447)

Manufacturer: Phoenix Contact Corp

Daisy Link at a maximum of 5 Units

4-wire M12 Link Cable, 0.6m (No. 1518892)
4-wire M12 SUS Link Cable, 0.6m (No. 1552638)

Manufacturer: Phoenix Contact Corp

Product Lineup

Specifications / Length	Side-exiting Cable Series (S)	M12 Quick Disconnect Series (C)	M12 Quick Disconnect Daisy Link Series (CL)	Stainless Steel (SUS) Body Series (C-SG/C-SA)
200 mm	2S: 6500K, 5000K	—	—	—
300 mm	3S: 6500K, 5000K	3C: 6500K, 5000K	3CL: 6500K, 5000K * Up to 4 units	3C: 6500K, SUS & Special Lens, 5000K, SUS & Special Lens
600 mm	6S: 6800K	6C: 6500K, 5000K	6CL: 6500K, 5000K * Only 1 Unit	—

MEMO

For more details, visit our website at http://www.patlite.com

Alarm Products

BM

Signal Horn

CE (AC/DC 24V Only)

90dB at 1m (BM-H Type)

2 Channels

IP34 (BM-D Front Only)

Φ30

NPN/PNP Open-collector

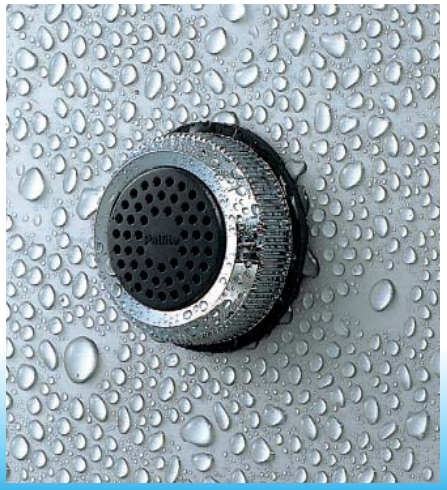

Compact Signal Horn designed to integrate with control panel, switchboard and other production equipment applications.

FEATURES

- Built-in Alarm with an audible sound of up to 90dB (at 1m*1).
- Has two selectable alarm sound patterns.
- Three Types to choose from; Standard (BM), High Volume (BM-H), Drip-proof (BM-D)
- Body is compact and lightweight (100g).
- The 24V type is compatible with NPN and PNP inputs.
- Has the CE mark and conforms to the requirements for the EC directive. (For AC/DC 24V only.)

*1 Model BM-H: 90dB (at 1m); Model BM: 85dB (at 1m); Model BM-D: 80dB (at 1m)

How to Order

BM-202 H

Model

Rated Voltage
- 202: AC/DC 24V
- 210: AC 100V
- 220: AC 220V

Body Type
- Blank: Standard
- H: High Volume
- D: Drip-proof

Application Example

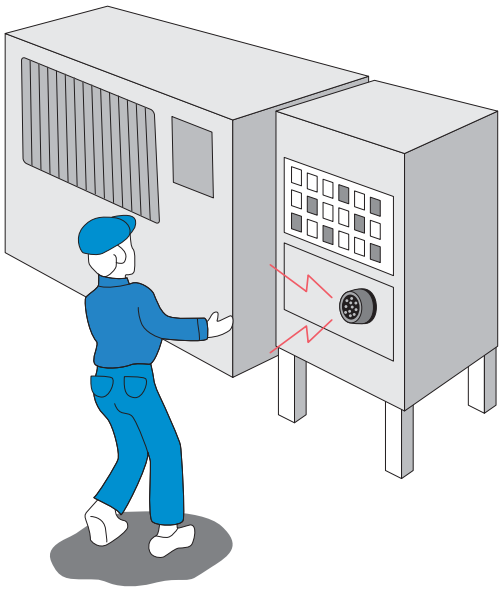

Dimensions

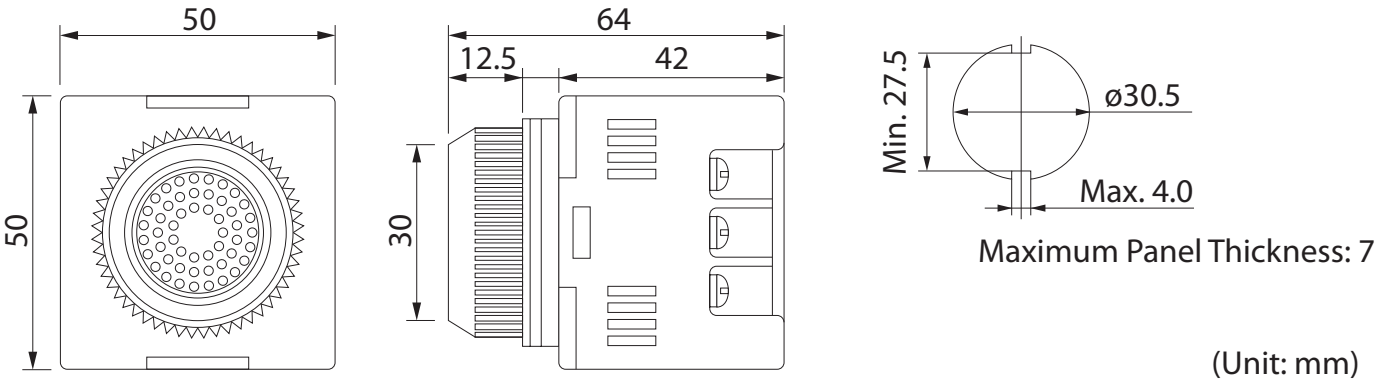

Maximum Panel Thickness: 7

(Unit: mm)

Wiring

Terminal Bus Input

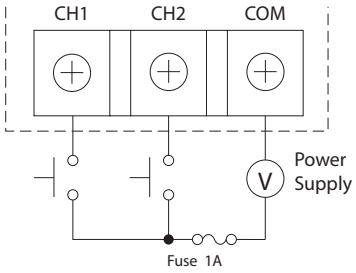

- Channel Priority
  CH1 > Ch2
  CH1 has priority when CH2 and CH1 are activated simultaneously

Rear View

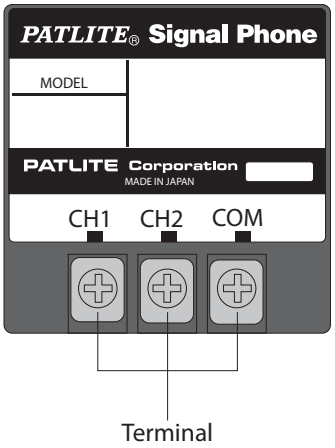

External Contact Capacity : No less than 100mA
Auxiliary Input : Voltage Contact
Input Channels : 2

Specifications

Type	Model	Rated Voltage	Voltage Range	Power Consumption	Max. Volume (at 1m)	Operating Temperature Range	Protection Rating	Mass
Standard	BM -202	AC/DC 24V	AC/DC 22V-26V	0.4W	80dB	-10°C - +60°C (RH 85% or less)	—	100g
	BM -210	AC 100V	AC 90V-110V	2.5W	85dB			
	BM -220	AC 220V	AC 200V-240V	3.5W				
High Volume	BM -202H	AC/DC 24V	AC/DC 22V-26V	0.4W	85dB			
	BM -210H	AC 100V	AC 90V-110V	2.5W	90dB			
	BM -212H	AC 120V	AC 108V-132V					
	BM -220H	AC 220V	AC 200V-240V	3.5W				
Drip-proof	BM -202D	AC/DC 24V	AC/DC 22V-26V	0.4W	75dB		IP34	
	BM -210D	AC 100V	AC 90V-110V	2.5W	80dB			
	BM -220D	AC 220V	AC 200V-240V	3.5W				

BD

Audible Alarm

AC/DC 24V Only

AC/DC 24V Only

90dB at 1m

4 Channels / **32** Sounds

IP54

□80

NPN
Open-collector

The BD Series can play melodies, chimes and alarms with variable audible control and a compact, but loud speaker.

FEATURES

- Maximum output level of 90dB (at 1m) is suitable for use in a noisy factory.
- 32 pre-recorded sounds in one unit to be used for various applications.
- Sound output level and sound group can be selected by rotary switches stored behind the front panel for easier operation, even after installation.
- Select a sound group to playback 4 pre-recorded sounds.
- A new sound group can be created from the 32 sounds by using an optional memory card (sold separately).
- Compliant with the RoHS directive
- Has the CE mark and conforms to the requirements (for 12V/24V type) for the EC directive.
- Is a UL recognized component (File No. E24210).

AVAILABLE BY SPECIAL ORDER

- Binary input controlled 15 sound playback model.
- PNP open collector transistor type.

Dimensions

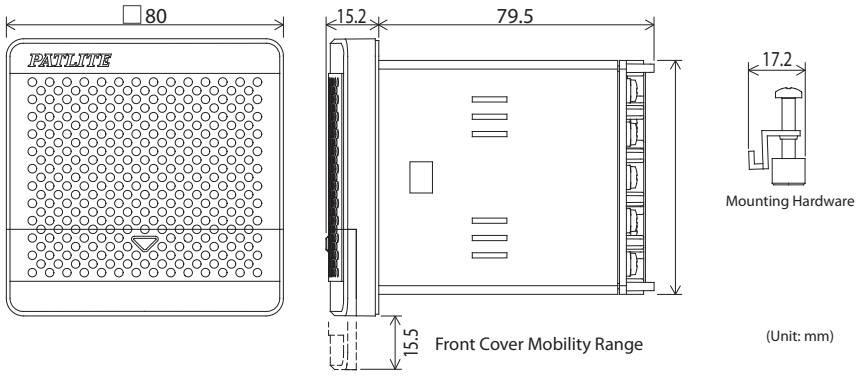

How to Order

BD-24A-J

Rated Voltage
24 : DC 24V
100: AC 100V/220V

Color
J: Ivory White
K: Dark Gray

Sound Type
A: Type A*
C: Type C*
D: Type D*
E: Type E

*Copyright laws limits availability to Japan only.

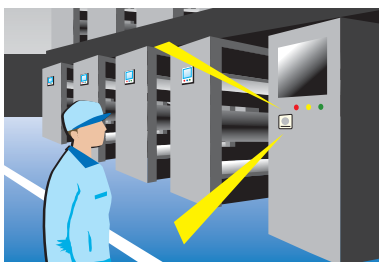

Wiring

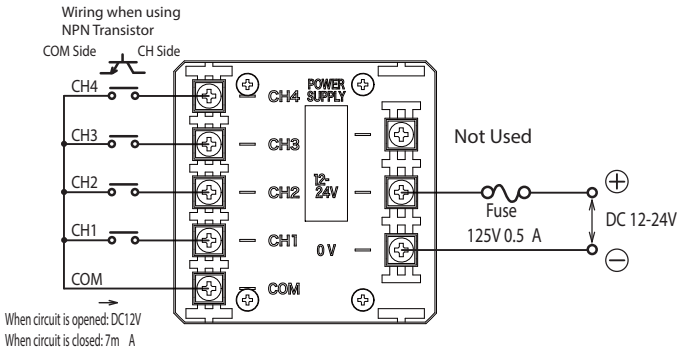

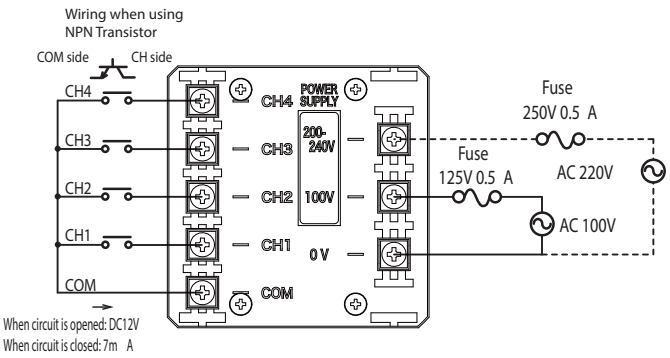

Melody List

Type A			(Japan Only)
Beep (slow intermittent)	Stutter (rapid intermittent)	Bell (clear high-pitch)	Yelp (rapid siren)
Rapid Hi-Lo	Melody Chime	Synthesized Piano	Synthesized Bell
Stutter + Bell	Synthesized Melody Chime	Chime	Call Sign
Fur Elise	Maiden's Prayer	Bach Minuet in Gmaj	Annie Laurie
London Bridge is falling down	Hol-di-ri-Dia	Mary had a little Lamb	Camptown Races
Cuckoo Song	Village Blacksmith	On the Bridge of Avignon	Daydream Believer
Amaryllis	Mozart Symphony No. 40	Quiet Lakeside	Ich bin ein Musikante
Spanish Romance	Katyusha	Grandfather's Clock	Ave Maria

Type D			(Japan Only)
Beep (slow intermittent)	Stutter (rapid intermittent)	Bell (clear high-pitch)	Yelp (rapid siren)
Rapid Hi-Lo	Melody Chime	Synthesized Piano	Synthesized Bell
Runner	Mamotte Agetai	Chime	Call Sign
Iribiao Kikinagara	September	Doyoubino Koibito	Akino Kehai
Saafu Tengoku Sukii Tengoku	Iro White-blend	Happy Birthday	Hi Ho
I've been working on the Railroad	The Bear Song	Toys Go "Cha-cha-cha"	Konnako Irukana
Schubert's Lullaby	Rudolph the red-nosed Reindeer	She Wore a Yellow Ribbon	My Darling, Clementine
Yellow Rose of Texas	Yankee Doodle	When the Saints Go Marching In	Londonderry Air

Type C			(Japan Only)
Beep (slow intermittent)	Stutter (rapid intermittent)	Bell (clear high-pitch)	Yelp (rapid siren)
Rapid Hi-Lo	Melody Chime	Synthesized Piano	Synthesized Bell
Stutter + Bell	Synthesized Melody Chime	Chime	Call Sign
Can't take my eyes off of you	Top of the World	The Entertainer	Amazing Grace
Amairono Kamino Otome	Les Champs-Elysees	Canon	Rara Sunshine
Uchuusenkan Yamamoto	Oshiete	Makenaide	Gonna Fly Now (Theme from "Rocky")
I don't Wanna Miss a Thing	Yozorano Mukou	Aiwa Katsu	Haruyo Koi
Gattsudaze	Odoru Ponpokorin	Imasugu Kisu Mi	Truth

Type E			(Worldwide)
Beep (slow intermittent)	Stutter + Bell	Inverted Reveille	Annie Laurie
Stutter (rapid intermittent)	Melody Chime	Galactic Motor	London Bridge is falling down
Bell (clear high-pitch)	Chime	Ringing Phone	Mary had a little Lamb
Yelp (rapid siren)	Call Sign	Two Tone	Camptown Races
Rapid Hi-Lo	Train Ride	Alarm Clock	Amaryllis
Melody Chime	Galloping Hi-Lo	Ringing Hi-Lo	Mozart Symphony No. 40
Synthesized Piano	Alien Chatter	Fur Elise	Ave Maria
Synthesized Bell	Falling Crystals	Bach Minuet in Gmaj	Grandfather's Clock

Specifications

Model	BD-24□	BD-100□
Rated Voltage	DC 12V - 24V	AC 100V/AC 220V (50/60Hz)
Operating Voltage Range	DC 10.8V- 26.4V	AC 100V ±10%/AC 200V ±10%
Operating Temperature Range	-20°C - +50°C	
Relative Humidity	85% RH (No Condensation)	
Power Consumption	Maximum 4W	Maximum 6W
Volume	Adjustable up to a maximum of 90dB (at 1m) when flushmounted. (Volume may be less, depending on surrounding environment and playback sound)	
Input Method	Bit Input	
Input Signal Duration	Continuous	
Boot-up Time	Input Voltage: 1 sec. or less Channel Signal Input: 170msec or less	
Channels	4 Channels	
Recorded Sound	32 Melodies and Alarm Sounds	
Sound Group	16 Patterns (A to P)	
Protection Rating	IP54 (When flush-mounted, Upright direction Only)	
Vibration Resistance	19.6m/s^2	
Mass	205 g ±10%	325 g ±10%

Use of Copyrighted Material

PATLITE Corporation has not applied for permission to use certain copyrighted music or songs recorded for Type-A, Type-C, and Type-D melody charts outside of Japan. Therefore, please contact the local copyright association for permission before using the product in case this product is used outside of Japan. Melody charts Type-E is recommended for use outside of Japan as this playlist does not include copyrighted music or songs, and permission is not required.

BK

Audible Alarm

RoHS

AC/DC 24V Only

CE AC/DC 24V Only

95dB at 1m

8 Channels / **32** Sounds

IP54

□120

NPN Open-collector

The BK Series can play melodies, chimes and alarms with variable audible control and a compact but loud speaker.

FEATURES

- 32 pre-recorded sounds in one unit to be used for various applications.
- Maximum output level of 90dB (at 1m) is suitable for use in a noisy factory.
- Rotary switch to easily change sound groups and adjust volume output from the front panel, even after installation.
- Use bit input to select a sound group to playback 8 pre-recorded sounds.
- A new sound group can be created from the 32 sounds by using an optional memory card (sold separately).
- Compliant with the RoHS directive
- Has the CE mark and conforms to the requirements (for 12V/24V type) for the EC directive.
- Is a UL recognized component (File No. E24210).

AVAILABLE BY SPECIAL ORDER

- PNP open collector transistor type.

Dimensions

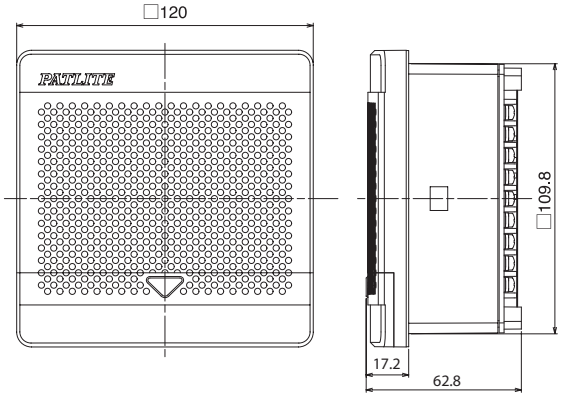

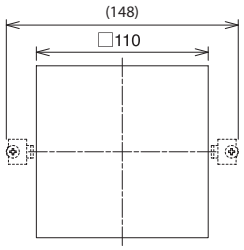

Mounting Dimensions

(Unit: mm)

How to Order

BK-24A-J

Model

Rated Voltage
24 : DC 12-24V
100: AC 100V
220: AC 220V

Sound Type
A: Type A*
C: Type C*
D: Type D*
E: Type E

Color
J: Light Gray
K: Dark Gray

*Copyright laws limits availability to Japan only.

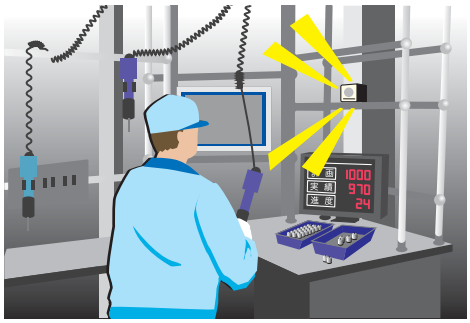

Wiring

Wiring when using
NPN Transistor

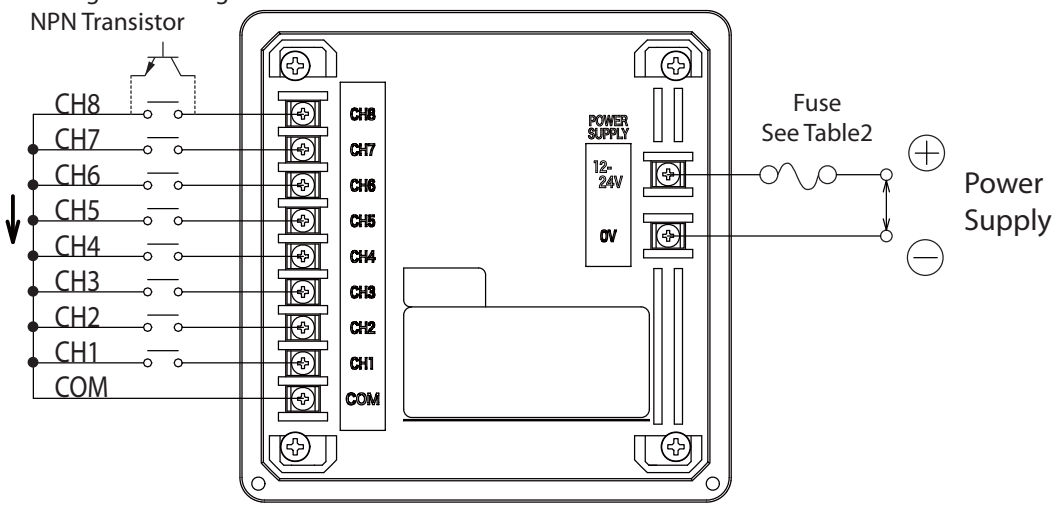

Melody List

Type A			(Japan Only)
Beep (slow intermittent)	Stutter (rapid intermittent)	Bell (clear high-pitch)	Yelp (rapid siren)
Rapid Hi-Lo	Melody Chime	Synthesized Piano	Synthesized Bell
Stutter + Bell	Synthesized Melody Chime	Chime	Call Sign
Fur Elise	Maiden's Prayer	Bach Minuet in Gmaj	Annie Laurie
London Bridge is falling down	Hol-di-ri-Dia	Mary had a little Lamb	Camptown Races
Cuckoo Song	Village Blacksmith	On the Bridge of Avignon	Daydream Believer
Amaryllis	Mozart Symphony No. 40	Quiet Lakeside	Ich bin ein Musikante
Spanish Romance	Katyusha	Grandfather's Clock	Ave Maria

Type D			(Japan Only)
Beep (slow intermittent)	Stutter (rapid intermittent)	Bell (clear high-pitch)	Yelp (rapid siren)
Rapid Hi-Lo	Melody Chime	Synthesized Piano	Synthesized Bell
Runner	Mamotte Agetai	Chime	Call Sign
Iribiao Kikinagara	September	Doyoubino Koibito	Akino Kehai
Saafu Tengoku Sukii Tengoku	Iro White-blend	Happy Birthday	Hi Ho
I've been working on the Railroad	The Bear Song	Toys Go "Cha-cha-cha"	Konnako Irukana
Schubert's Lullaby	Rudolph the red-nosed Reindeer	She Wore a Yellow Ribbon	My Darling, Clementine
Yellow Rose of Texas	Yankee Doodle	When the Saints Go Marching In	Londonderry Air

Type C			(Japan Only)
Beep (slow intermittent)	Stutter (rapid intermittent)	Bell (clear high-pitch)	Yelp (rapid siren)
Rapid Hi-Lo	Melody Chime	Synthesized Piano	Synthesized Bell
Stutter + Bell	Synthesized Melody Chime	Chime	Call Sign
Can't take my eyes off of you	Top of the World	The Entertainer	Amazing Grace
Amairono Kamino Otome	Les Champs-Elysees	Canon	Rara Sunshine
Uchuusenkan Yamamoto	Oshiete	Makenaide	Gonna Fly Now (Theme from "Rocky")
I don't Wanna Miss a Thing	Yozorano Mukou	Aiwa Katsu	Haruyo Koi
Gattsudaze	Odoru Ponpokorin	Imasugu Kisu Mi	Truth

Type E			(Worldwide)
Beep (slow intermittent)	Stutter + Bell	Inverted Reveille	Annie Laurie
Stutter (rapid intermittent)	Melody Chime	Galactic Motor	London Bridge is falling down
Bell (clear high-pitch)	Chime	Ringing Phone	Mary had a little Lamb
Yelp (rapid siren)	Call Sign	Two Tone	Camptown Races
Rapid Hi-Lo	Train Ride	Alarm Clock	Amaryllis
Melody Chime	Galloping Hi-Lo	Ringing Hi-Lo	Mozart Symphony No. 40
Synthesized Piano	Alien Chatter	Fur Elise	Ave Maria
Synthesized Bell	Falling Crystals	Bach Minuet in Gmaj	Grandfather's Clock

Specifications

Model	BK-24□	BK-100□	BK-220□
Rated Voltage	DC 12V-24V	AC 100V (50/60Hz)	AC 220V (50/60Hz)
Operating Voltage Range	DC 10.8V- 26.4V	AC 100V ±10%	AC 200V ±10%
Operating Temperature Range	-20^{0}C - $+50^{0}$C		
Relative Humidity	85% RH (No Condensation)		
Power Consumption	Maximum 4W	Maximum 5W	
Volume	Adjustable up to a maximum of 90dB (at 1m) when flushmounted. (Volume may be less, depending on surrounding environment and playback sound)		
Input Method	Bit Input		
Input Signal Duration	Continuous		
Boot-up Time	Input Voltage: 1 sec. or less Channel Signal Input: 170msec or less		
Channels	4 Channels		
Recorded Sound	32 Melodies and Alarm Sounds		
Sound Group	16 Patterns (A to P)		
Protection Rating	IP54 (When flush-mounted, Upright direction Only)		
Vibration Resistance	19.6m/s^2		
Mass	205 g ±10%	325 g ±10%	

Use of Copyrighted Material

PATLITE Corporation has not applied for permission to use certain copyrighted music or songs recorded for Type-A, Type-C, and Type-D melody charts outside of Japan. Therefore, please contact the local copyright association for permission before using the product in case this product is used outside of Japan. Melody charts Type-E is recommended for use outside of Japan as this playlist does not include copyrighted music or songs, and permission is not required.

EWHS

Signal Horn

105dB at 1m

1 Channel / 32 Sounds

IP65 (Available by Special Order

Cable

NPN/PNP Open-collector

Original wide horn design featuring a high volume of up to 105dB (at 1m), designed for use in noisy environments.

FEATURES

- Select 1 channel from the 32 pre-recorded sounds using the built-in DIP Switch.
- Enhanced for durability and safety in the work environment.
- Adjustable audible sound of up to 105dB (at 1m) with volume control.
- Indoor installation for upright, inverted and sideways position; upright only for outdoors. (Do not install with the horn facing upward).
- Has the CE mark and conforms to the requirements (for 12V, 24V type) for the CE directive.
- Anti-corrosive stainless steel mounting bracket makes installation easier.

Specifications

Model		Rated Voltage	Voltage Range	Power Consumption	Protection Rating	Operating Temperature Range	Sound Pressure (at 1m)	External Contact Capacity	Channel Inputs	Mass
EWHS	EWHS -24	AC/DC 12-24V	AC 8 - 28V DC 9 - 35V	8W	IP54 (IP65 by Special Order)	-20°C to +60°C 85% RH or less	105dB	5A or more	1CH	1.2kg
	EWHS -48	DC 48V	DC 35 - 60V	10W						
	EWHS -100	AC 100V	AC 90 - 132V	12W						1.4kg
	EWHS -200	AC 200V	AC 180 - 260V	13W						

Dimensions

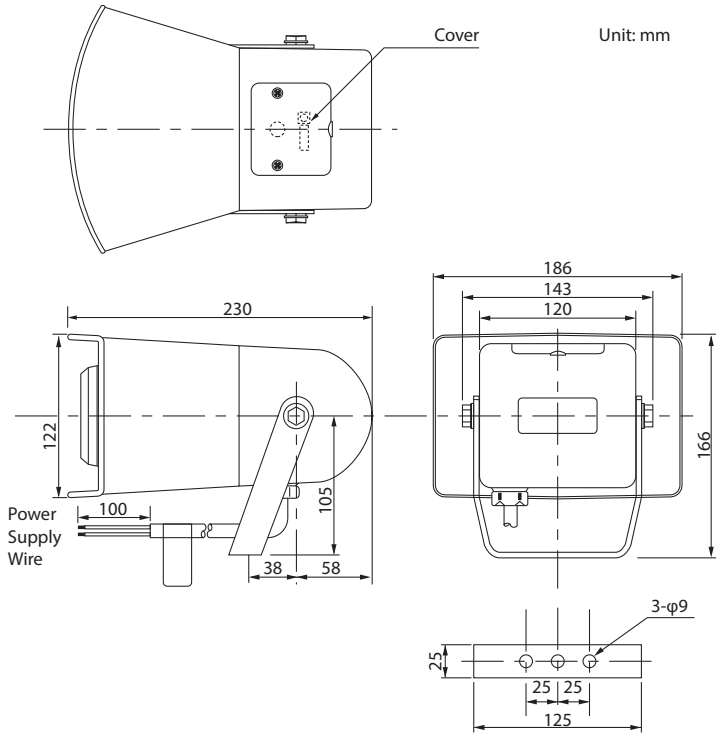

How to Order

EWHS-24A-J

- Model: EWHS: 1 channel
- Rated Voltage: 24 : AC/DC 12/24V; 48 : DC 48V; 100: AC 100V; 200: AC 200V
- Sound Type: A: Type A*; C: Type C*; D: Type D*; E: Type E
- Body Color: J: Ivory White; Y: Yellow; R : Red

*Copyright laws limits availability to Japan only.

Use of Copyrighted Material

PATLITE Corporation has not applied for permission to use certain copyrighted music or songs recorded for Type-A, Type-C, and Type-D melody charts outside of Japan. Therefore, please contact the local copyright association for permission before using the product in case this product is used outside of Japan. Melody charts Type-E is recommended for use outside of Japan as this playlist does not include copyrighted music or songs, and permission is not required.

Type A (Japan Only)

Beep (slow intermittent)	Stutter (rapid intermittent)	Bell (clear high-pitch)	Yelp (rapid siren)
Rapid Hi-Lo	Melody Chime	Synthesized Piano	Synthesized Bell
Stutter + Bell	Synthesized Melody Chime	Chime	Call Sign
Fur Elise	Maiden's Prayer	Bach Minuet in Gmaj	Annie Laurie
London Bridge is falling down	Hol-di-ri-Dia	Mary had a little Lamb	Camptown Races
Cuckoo Song	Village Blacksmith	On the Bridge of Avignon	Daydream Believer
Amaryllis	Mozart Symphony No. 40	Quiet Lakeside	Ich bin ein Musikante
Spanish Romance	Katyusha	Grandfather's Clock	Ave Maria

Type D (Japan Only)

Beep (slow intermittent)	Stutter (rapid intermittent)	Bell (clear high-pitch)	Yelp (rapid siren)
Rapid Hi-Lo	Melody Chime	Synthesized Piano	Synthesized Bell
Runner	Mamotte Agetai	Chime	Call Sign
Iribiao Kikinagara	September	Doyoubino Koibito	Akino Kehai
Saafu Tengoku Sukii Tengoku	Iro White-blend	Happy Birthday	Hi Ho
I've been working on the Railroad	The Bear Song	Toys Go "Cha-cha-cha"	Konnako Irukana
Schubert's Lullaby	Rudolph the red-nosed Reindeer	She Wore a Yellow Ribbon	My Darling, Clementine
Yellow Rose of Texas	Yankee Doodle	When the Saints Go Marching In	Londonderry Air

Type C (Japan Only)

Beep (slow intermittent)	Stutter (rapid intermittent)	Bell (clear high-pitch)	Yelp (rapid siren)
Rapid Hi-Lo	Melody Chime	Synthesized Piano	Synthesized Bell
Stutter + Bell	Synthesized Melody Chime	Chime	Call Sign
Can't take my eyes off of you	Top of the World	The Entertainer	Amazing Grace
Amairono Kamino Otome	Les Champs-Elysees	Canon	Rara Sunshine
Uchuusenkan Yamamoto	Oshiete	Makenaide	Gonna Fly Now (Theme from "Rocky")
I don't Wanna Miss a Thing	Yozorano Mukou	Aiwa Katsu	Haruyo Koi
Gattsudaze	Odoru Ponpokorin	Imasugu Kisu Mi	Truth

Type E (Worldwide)

Beep (slow intermittent)	Stutter + Bell	Inverted Reveille	Annie Laurie
Stutter (rapid intermittent)	Melody Chime	Galactic Motor	London Bridge is falling down
Bell (clear high-pitch)	Chime	Ringing Phone	Mary had a little Lamb
Yelp (rapid siren)	Call Sign	Two Tone	Camptown Races
Rapid Hi-Lo	Train Ride	Alarm Clock	Amaryllis
Melody Chime	Galloping Hi-Lo	Ringing Hi-Lo	Mozart Symphony No. 40
Synthesized Piano	Alien Chatter	Fur Elise	Ave Maria
Synthesized Bell	Falling Crystals	Bach Minuet in Gmaj	Grandfather's Clock

Wiring

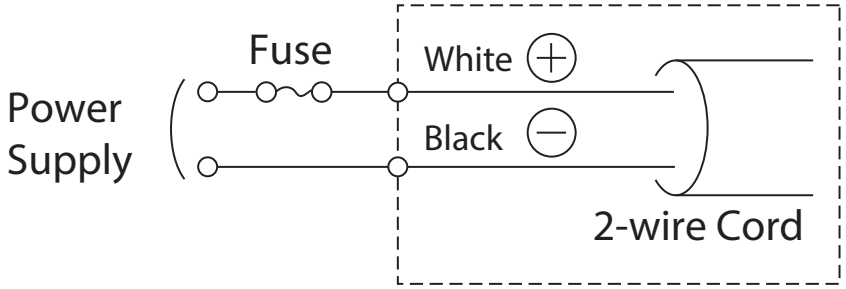

MEMO

For more details, visit our website at http://www.patlite.com

Voice & Sound

SW1
SW2
ON
OFF
MAX.
MIN.
SP L Vol.
MODEL
FV-511AM2
PATLITE Corp
Signal Voice
MP3 Player
Direct Out
RS-232C
Remote Control
COM
OUT +12V
6
7
8
9
10
CLR
GND
AUX
COM
OUT
STB
1
2
3
4
5
STOP
GND
BUSY
OUT
IN

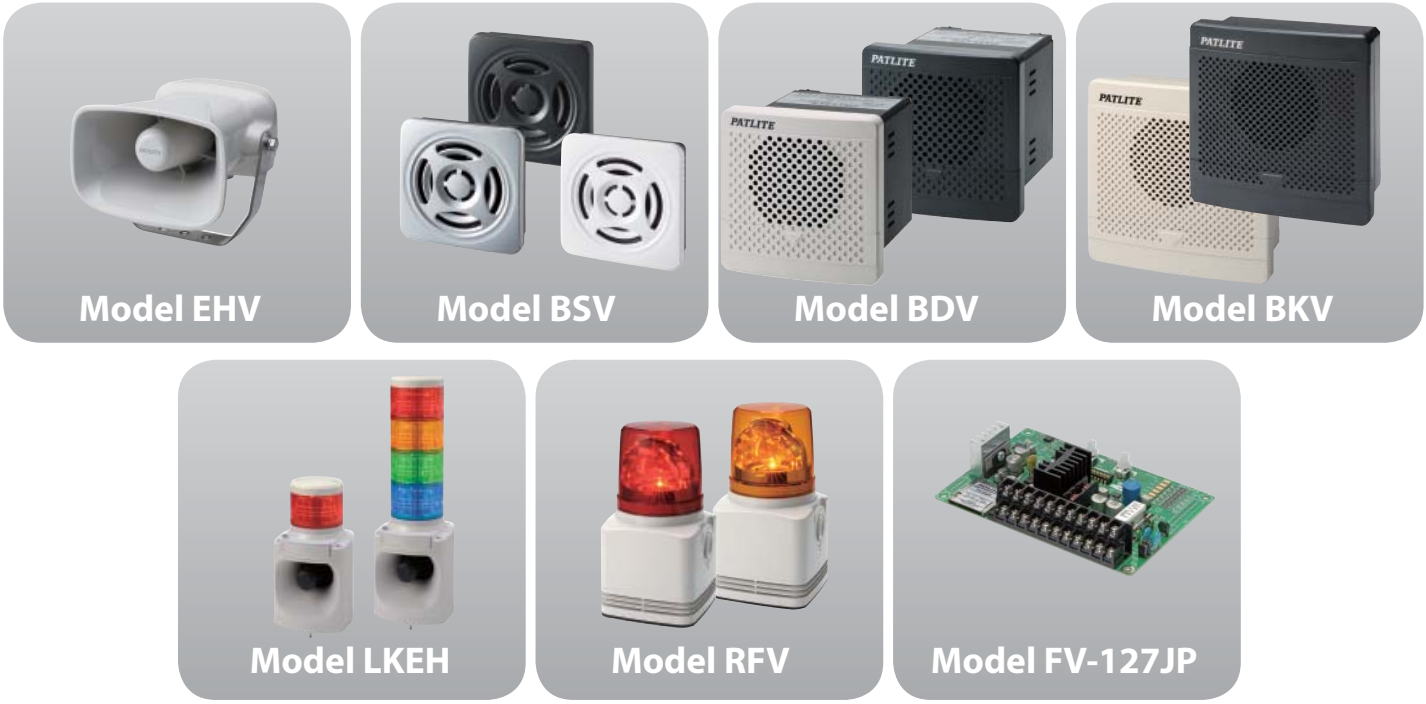

STEP 1 Get the New Playlist Editor 2

The Playlist Editor 2 is free from PATLITE. Download the PATLITE Playlist Editor 2 from our Global Home Page, or contact us by E-mail, which can be located on the back of this catalog.

STEP 2 Get the Recommended SD Card (Model SDV-2GP)

The SDV-2GP is an SD Card approved and supplied by PATLITE.
(The PATLITE Corporation is a member of the SD Card Association.)

STEP 3 Create the MP3 messages

Convert any message into MP3 data.
(Remove "ID3" tags and be sure the sample rate is the standard rate of 64kb/sec for PATLITE products and the SD Card is formatted for "FAT16".)

STEP 4 Save the MP3 messages on the SD Card

Use the Playlist Editor 2 to create a playlist and save it on an SD Card.
(Refer to the product manual for detailed information)

STEP 5 Load the MP3 Data into the Product

Programming can be done right out in the field!
Insert the SD Card into the Product's SD Card slot and listen for the Beep that tells it's programming (Refer to the product manual for detailed information on programming).

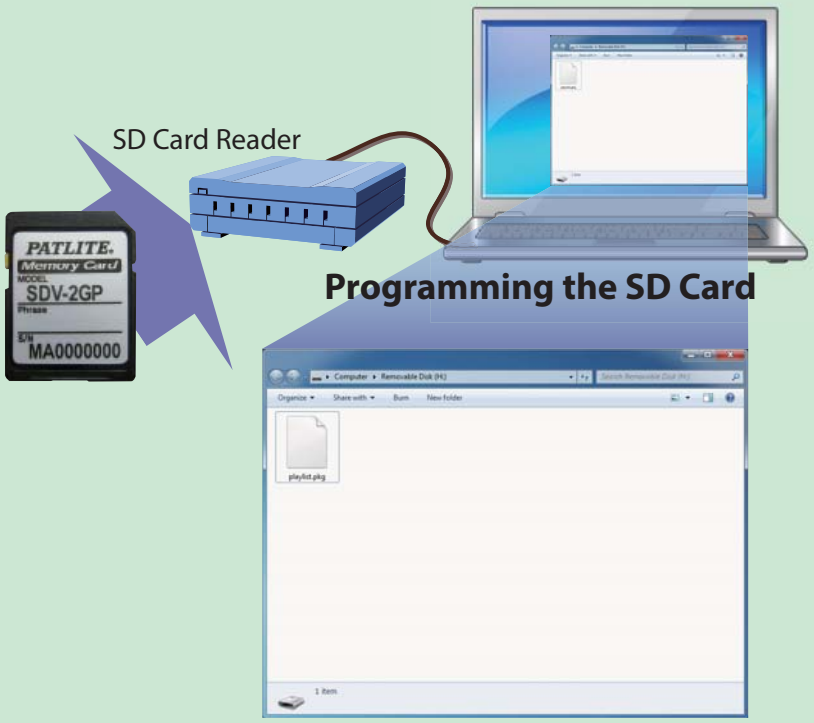

PATLITE Playlist Editor 2

Create any Playlist using Playlist Editor2

With PATLITE's downloadable Playlist Editor2 from the Web, and most Windows OS software;

Playlist Editor 2 Overview

1. Decide on the sounds and messages for Channels and Phrases
2. Start the Software.

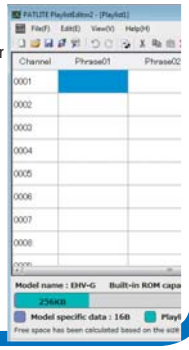

1. Insert the sound or message files into appropriate channels and phrases
2. Save as "playlist.slp" after all files are installed
3. The playlist creation is completed.

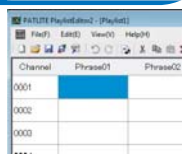

Get the Necessary Items:

1. An SD Card to save the data onto for rewriting (Recommended Parts : option part SDV-2GP)
2. Personal Computer with all hardware operating normally.
3. SD card reader/writer (if one is not built inside the personal computer)
4. Application Software (PATLITE Playlist Editor 2)
   Corresponding OS: Windows® XP, Windows Vista™ 32 bits/64 bit, Windows® 7 32bit/64 bit, Windows® 8 32bit/64 bit.

* Writing data onto the SD Card with a computer can be done without the PATLITE Playlist Editor 2, but some functions may be limited. (Refer to the product manual for mor-e details)

Example (EHV)

1. Remove the cover to access the SD Card Slot. (Refer to the product manual for more details)
2. After inserting the SD Card with the stored data into the slot, a high-low beep will sound to indicate rewriting has begun.
3. When a short beep sound is heard, it indicates the rewriting sequence is complete and the SD Card can be removed from the slot.
   * Rewriting should be completed within 60 seconds. The rewriting is not successfully completed if beeping sounds other than indicated above are heard, or when there is no response (Refer to the product manual for more details). In addition, if the volume has been minimized, the beeping sounds cannot be heard.
4. Playback the channels to verify the rewriting has been successful. (Refer to the product manual for more details)

Table: Corresponding Application Software

Application Software	Usable	Outline
PATLITE Playlist Editor 2	All PATLITE Products	This is a newer version of the PATLITE Playlist Editor. A playlist package can be created and the MP3 data and channel function assignment for the product can be rewritten.
FV-Win	Limited PATLITE Products (Products prior to the EHV)	This product is not compatible with the playlist created by FV-Win or the PATLITE Playlist Editor. However, the playlist can be changed into a playlist package using the PATLITE Playlist Editor 2.
PATLITE Playlist Editor		

Caution

- FV-Win or the PATLITE Playlist Editor can only be used with certain models, but the PATLITE Playlist Editor 2 will work with all PATLITE products.

Please

- It is recommended to use Model SDV-2GP (sold separately). Proper operation is not guaranteed with other SD Cards.
- When inserting the SD Card into the slot, be sure to insert it in the proper direction and do not forcibly insert the card. Failure to comply will result in damage to the SD Card and/or product.
- Avoid the intrusion of any foreign substances from entering the card slot.
- While rewriting the messages, do not disconnect power or remove the SD Card.

Note

- If the SD Card was inserted during message playback, the rewriting procedure will commence soon after the message completes its playback.
- During the message rewrite, any signal inputs on the Audio Input line will be ignored.

Model BSV

Model BDV

Model BKV

Model LKEH

Model RFV

Model FV-127JP

STEP 1 Get the Playlist Editor

The Playlist Editor is still free from PATLITE.
Contact us by E-mail, which can be located on the back of this catalog.

STEP 2 Get the Recommended SD Card (Model SDV-2GP)

The SDV-2GP is an SD Card approved and supplied by PATLITE.
(The PATLITE Corporation is a member of the SD Card Association.)

STEP 3 Create the MP3 messages

Convert any message into MP3 data.
(Remove "ID3" tags and be sure the sample rate is the standard rate of 64b/sec for PATLITE products and the SD Card is formatted for "FAT16".)

STEP 4 Save the MP3 messages on the SD Card

The Model BSV allows two methods for programming with MP3 Data. (Refer to the product manual for detailed information)

STEP 5 Load the MP3 Data into the Product

Programming can be done right out in the field!
Push the SD Card into the Product's SD Card slot and listen for the Beep that tells its programming (Refer to the product manual for detailed information on programming).

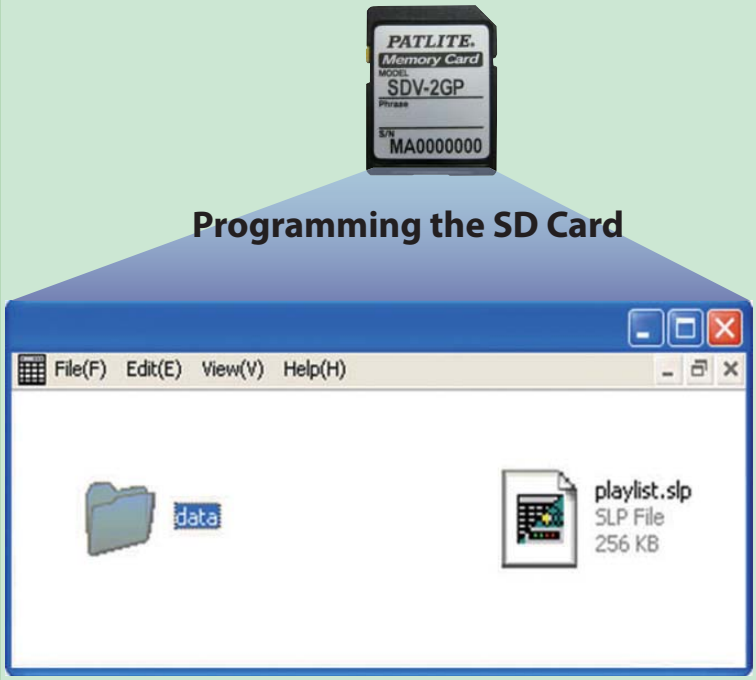

PATLITE Playlist Editor

Create any Playlist using Playlist Editor

With PATLITE's downloadable Playlist Editor from the Web, and Windows XP and Vista OS software;

Playlist Editor Overview

1. Decide on the sounds and messages for Channels and Phrases
2. Start the Software.

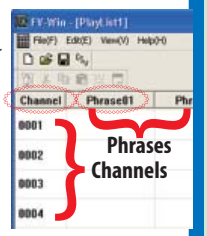

1. Insert the sound or message files into appropriate channels and phrases
2. Save as "playlist.slp" after all files are installed
3. The playlist creation is completed.

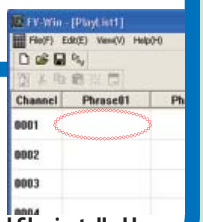

Sound files installed here

Example (BKV, LKEH)

1. Open the front cover. (Refer to the product manual for more details)
2. After inserting the SD Card with the stored data into the slot, a high-low beep will sound to indicate rewriting has begun.
3. When a short beep sound is heard, it indicates the rewriting sequence is complete and the SD Card can be removed from the slot.
   * Rewriting should be completed within 60 seconds. The rewriting is not successfully completed if beeping sounds other than indicated above are heard, or when there is no response (Refer to the product manual for more details). In addition, if the volume has been minimized, the beeping sounds cannot be heard.
4. Playback the channels to verify the rewriting has been successful. (Refer to the product manual for more details)

Please

- It is recommended to use Model SDV-2GP (sold separately). Using other SD Cards is not guaranteed for proper operation.
- Use "FAT16" when formatting the SD Card.
- When inserting the SD Card into the slot, be sure to insert it in the proper direction and do not forcibly insert the card. Failure to comply will result in damage to the SD Card and/or product.
- Avoid the intrusion of any foreign substances from entering the card slot.
- While rewriting the messages, do not disconnect power or remove the SD Card.

Note

- If the SD Card was inserted during message playback, the rewriting procedure will commence soon after the message completes its playback.
- During the message rewrite, any signal inputs on the Audio Input line will be ignored.

BSV

Voice Annunciator

87 dB at 1m

15 Channels (Binary)

63 Seconds

IP54

□75

NPN/PNP
Open-collector

The unbelievably thin design includes space-saving for equipment.

FEATURES

- Sound reduction is made with just one signal input. (When the sound reduction function is used, the number of playback messages is reduced.)
- Diverse operational modes in combination with commands can be setup for the right application.
- The use of the SD card can allow changing messages while out in the field.
- Protection Rating of IP54 (Only for front panel mount attachment).
- Despite the thin shape, it has a maximum output of 87dB (at 1m).
- It complies with Europe's environment-friendly RoHS Directive.
- Can be used with transistor driven inputs. (Either NPN or PNP)
- A compact design with only a thickness of 19.9mm.
- Two installation choices of panel or wall mount.
- The volume control is accessible from the front.
- Listed by Underwriters Laboratories Inc.
- Conforms to the CE requirements.

Easy installation from the front.

With only the need to access the front cover, reduction in labor time and maintenance is simpler with easily removing the front cover for installation and volume adjustment, etc.

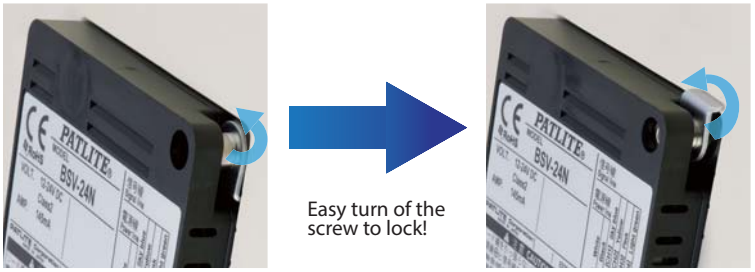

Options

PATLITE Playlist Editor 2 (Free Download)

(OS: Windows® 2000/XP/Vista/Windows 7/Windows 8)

> The new PATLITE Playlist Editor 2 is required to change the audio message data for this product.

> The SD Card does not contain any data.

SD Card (2 GB) SDV-2GP

Dimensions

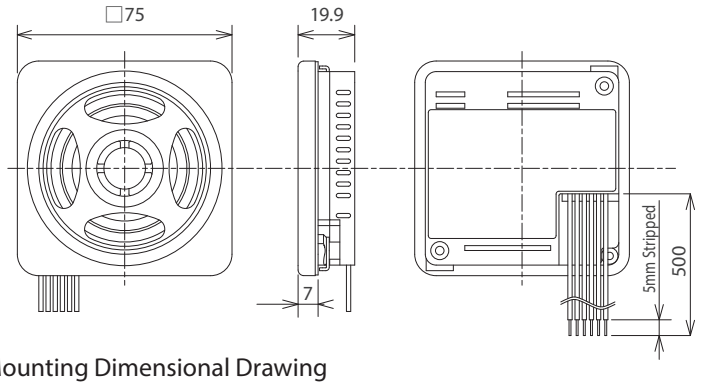

Mounting Dimensional Drawing

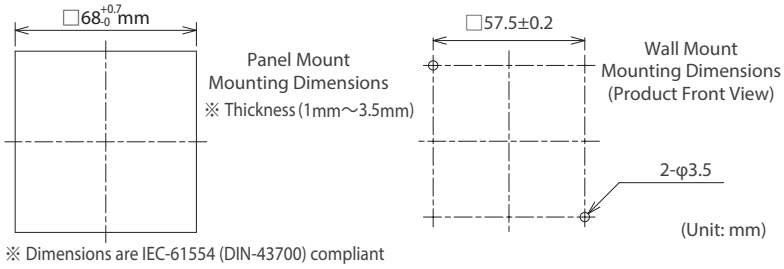

※ Dimensions are IEC-61554 (DIN-43700) compliant

How to Order

BSV-24NM-W

Transistor Type
N: NPN
P: PNP

Pre-recorded Message
None: 15 Built-in Alarms
M : Pre-recorded Messages
(Caution) If the pre-recorded voice message data is overwritten, all of it will be erased.
Also, message data cannot be exported.

Front Cover Color
W: Off-white
D: Dark Gray
S: Silver

Actual Size

☐ Panel Mount

☐ Wall Mount

With the built-in SD card slot, MP3 data rewriting can be done with an SD card.
In addition to the optional message rewriting with the exclusive PATLITE Playlist Editor 2 Application software, Rewriting or editing MP3 data files is possible without the use of dedicated software.

Wiring

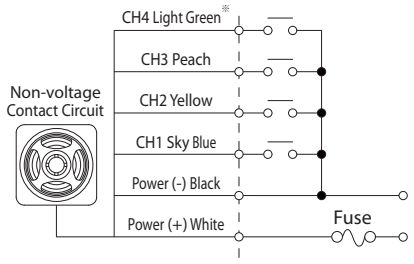

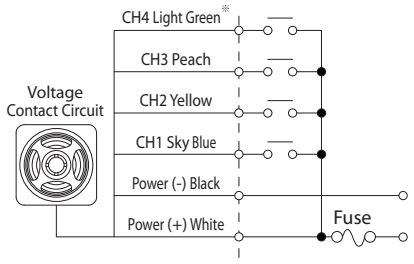

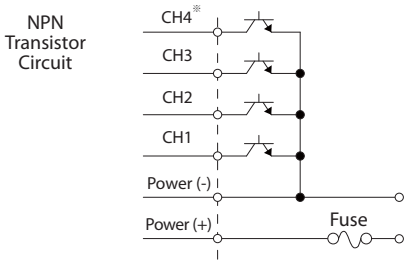

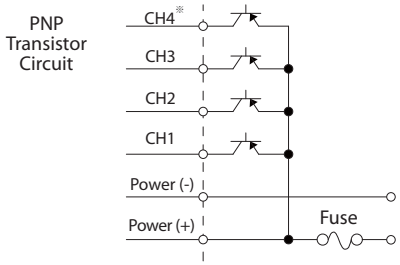

Specifications

Transistor Type	Pre-recorded Data	Model	Front Cover Color	Rated Voltage	Operating Voltage Range	Power Consumption	Sound Level (Max.)	Operating Temperature Range	Maximum Playback Time	No. of Playback Inputs	Protection Rating	Mass
NPN	VOICE	BSV- 24NM- W	Off-white	12-24V DC	10.8V - 26.4V DC	3.5W	87dB (at 1m)	-10 - +50°C (RH less than 85%)	63 sec.	Bit: 4 Binary: 15	IP54 (Flush-mount, Upright Position)	100g
		BSV- 24NM- D	Dark Gray									
		BSV- 24NM- S	Silver									
	ALARM	BSV- 24N- W	Off-white									
		BSV- 24N- D	Dark Gray									
		BSV- 24N- S	Silver									
PNP	VOICE	BSV- 24PM- W	Off-white									
		BSV- 24PM- D	Dark Gray									
		BSV- 24PM- S	Silver									
	ALARM	BSV- 24P- W	Off-white									
		BSV- 24P- D	Dark Gray									
		BSV- 24P- S	Silver									

*Actual sound level will depend on sound type and surrounding operating conditions.

BDV

Voice Annunciator

RoHS CE BDV-15JF Only

- 87 dB at 1m
- 15 Channels (Binary)
- 63 Seconds
- IP54 (Upright Only)
- □80
- NPN Open-collector

Excellent sound quality with MP3 playback! This panel-mounted MP3 voice annunciator uses SD cards*, allowing messages to be changed easily. (*Recommended: SDV-2GP)

FEATURES

- Only Flush-mounting style available.
- Able to produce a loud sound of up to 87 dB (at 1m) despite its compact size
- A volume control on the front panel provides an easy way to adjust the sound volume.
- The use of an SD card allows message changes without uninstalling the device.
- Environmentally friendly since the unit complies with the EU RoHS Directives.
- Several playback modes are available for various applications.
- Includes binary input as a standard option for selecting up to 15 messages.
- Supports input selection using NPN open-collector transistor.
- The unit complies with EU Directives and includes the CE mark (BDV-15JF only)
- Two colors are available for selecting the best color match for the installation.
- Protection rating: IP54 (only the front panel when flush-mounted)

How to Order

BDV-15JF-J

Rated Voltage	Color
J: DC 12-24V K: AC 100V/220V	J: Ivory White K: Dark Gray

Dimensions

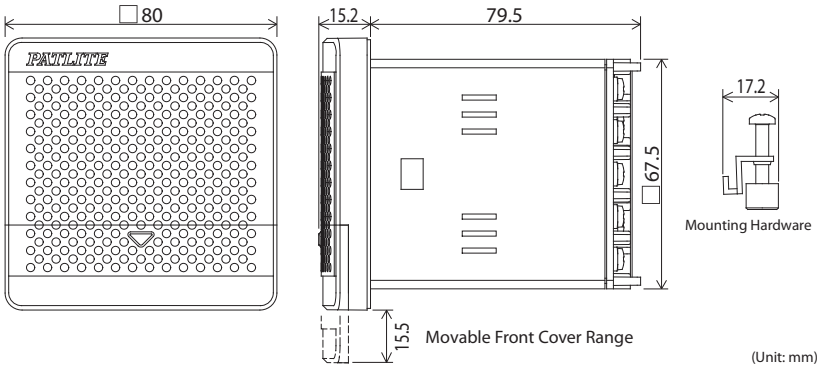

Wiring Diagram

Wiring when using NPN Transistor

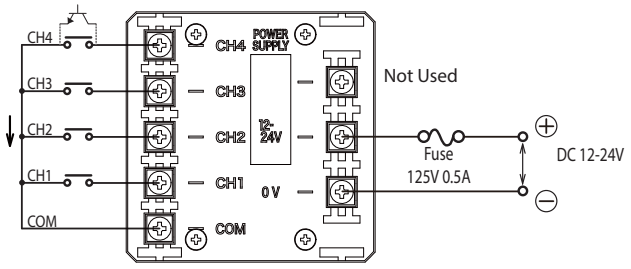

Wiring when using NPN Transistor

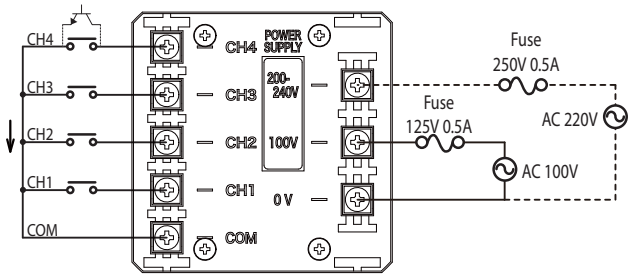

Playback Modes

Mode Selector Switch

Several playback modes for a combination of applications.

A	Bit Input Mode	Plays back up to 4 messages using Channels 1 to 4.
B	Binary Input Mode	Plays back up to 15 messages using Channels 1 to 4.
C	Bit Input/ Volume Reduction Mode	Plays back up to 3 messages using Channels 1 to 3. When Channel 4 receives an input, the volume is reduced by about -10dB.
D	Binary Input/ Volume Reduction Mode	Plays back up to 7 messages using Channels 1 to 3. When Channel 4 receives an input, the volume is reduced by about -10dB.
E	Bit Input/ Priority Message Playback Mode	Plays back up to 7 messages using Channels 1 to 3. If a message input occurs during playback of another message, the message will stop and allow the input message to play back.
F	Binary Input/ Priority Message Playback Mode	Plays back up to 15 messages using Channels 1 to 4. If a message input occurs during playback of another message, the message will stop and allow the input message to play back.
G	Bit Input/ Hold Message Playback Mode	Plays back up to 4 messages using Channels 1 to 4. As long as the input is held on, the message is played back, once the input is removed, the message playback stops.
H	Binary Input/ Hold Message Playback Mode	Plays back up to 15 messages using Channels 1 to 4. As long as the input is held on, the message is played back, once the input is removed, the message playback stops.
I - P	Test Playback Mode	Plays back Message No. 1

Up to 87dB (at 1m)

Despite its slim appearance, it is able to produce a maximum of 87dB (at 1m).
(Actual sound level will depend on sound type and surrounding operating conditions.)

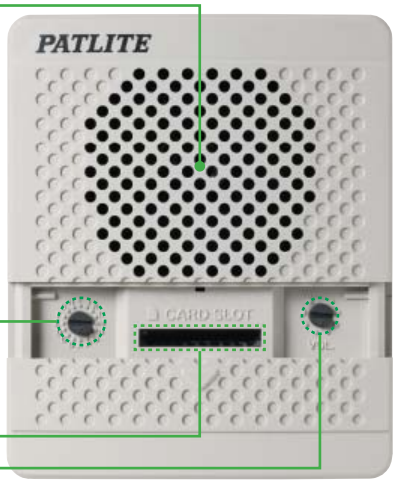

Volume Control

The volume is easily accessable from the front for adjustment.

Memory Card Slot

With an SD Card, messages can be changed while the unit is still mounted.

Options

PATLITE Playlist Editor 2 (Free Download)
(OS: Windows® 2000/XP/Vista/Windows 7/Windows 8)

> The new PATLITE Playlist Editor 2 is required to change the audio message data for this product.

> The SD Card does not contain any data.

SD Card (2 GB) SDV-2GP

Specifications

Model	Rated Voltage	Operating Voltage Range	Power Consumption	Sound Level (Max.)	Voice File	Operating Temperature Range	Maximum Playback Time	No. of Playback Inputs	Protection Rating	Mass
BDV-15JF	DC 12-24V	DC 10.8V - 26.4V	4W	87dB* (at 1m)	MPEG- Audio Layer (MP3) Standard Bit Rate: 64kb/s Fs=44.1kHz	-10 - +50°C (RH less than 85%)	63 sec.	Bit: 4 Binary: 15	IP54 (Flush-mount)	220g
BDV-15KF	AC 100/220V	AC 100V ±10% AC 220V±10%	5W							340g

*Actual sound level will depend on sound type and surrounding operating conditions.

BKV

Voice Annunciator

RoHS CE BDV-15JF Only

- 95 dB at 1m
- 31 Channels (Binary)
- 63 Seconds
- IP54 (Upright Only)
- □120
- NPN Open-collector

Excellent sound quality with MP3 playback! This panel-mounted MP3 voice annunciator uses SD cards,* allowing messages to be changed easily. (*Recommended: SDV-2GP)

FEATURES·

- Only Flush-mounting style available.
- Able to produce a loud sound of up to 87 dB (at 1m) despite its compact size
- A volume control on the front panel provides an easy way to adjust the sound volume.
- The use of an SD card allows message changes without uninstalling the device.
- Environmentally friendly since the unit complies with the EU RoHS Directives.
- Several playback modes are available for various applications.
- Includes binary input as a standard option for selecting up to 15 messages.
- Supports input selection using NPN open-collector transistor.
- The unit complies with EU Directives and includes the CE mark (BKV-15JF only)
- Two colors are available for selecting the best color match for the installation.
- Protection rating: IP54 (only the front panel when flush-mounted)

How to Order

BKV-31JF-J

Model

Rated Voltage
- J: DC 12-24V
- K: AC 100V
- Q: AC 220V

Color
- J: Light Gray
- K: Dark Gray

Dimensions

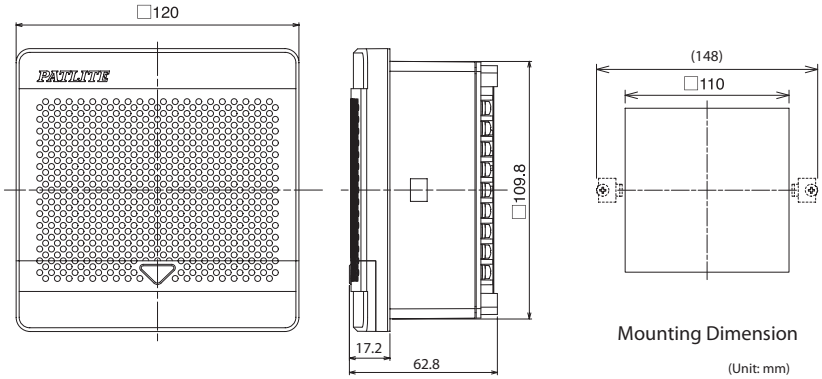

Mounting Dimension

(Unit: mm)

Playback Modes

Mode Selector Switch

Several playback modes for a combination of applications.

A	Bit Input Mode	Plays back up to 5 messages using Channels 1 to 5.
B	Binary Input Mode	Plays back up to 31 messages using Channels 1 to 5.
C	Bit Input/ Volume Reduction Mode	Plays back up to 4 messages using Channels 1 to 4. When Channel 5 receives an input, the volume is reduced by about -15dB.
D	Binary Input/ Volume Reduction Mode	Plays back up to 15 messages using Channels 1 to 4. When Channel 5 receives an input, the volume is reduced by about -15dB.
E	Bit Input/ Priority Message Playback Mode	Plays back up to 5 messages using Channels 1 to 5. If a message input occurs during playback of another message, the message will stop and allow the input message to play back.
F	Binary Input/ Priority Message Playback Mode	Plays back up to 31 messages using Channels 1 to 5. If a message input occurs during playback of another message, the message will stop and allow the input message to play back.
G	Bit Input/ Hold Message Playback Mode	Plays back up to 5 messages using Channels 1 to 5. As long as the input is held on, the message is played back, once the input is removed, the message playback stops.
H	Binary Input/ Hold Message Playback Mode	Plays back up to 31 messages using Channels 1 to 5. As long as the input is held on, the message is played back, once the input is removed, the message playback stops.
I - P	Test Playback Mode	Plays back Message No. 1

Up to 95dB (at 1m)

Despite its slim appearance, it is able to produce a maximum of 87dB (at 1m).
(Actual sound level will depend on sound type and surrounding operating conditions.)

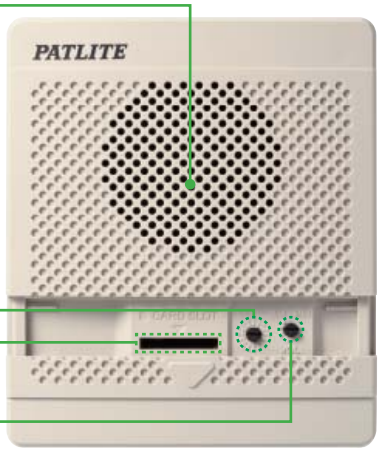

Volume Control

The volume is easily accessable from the front for adjustment.

Memory Card Slot

With an SD Card, messages can be changed while the unit is still mounted.

Optional Bracket (BK-001)

This bracket is used to install the annunciator in a place where holes have already been drilled for conventional PATLITE Product (φ133mm Type)

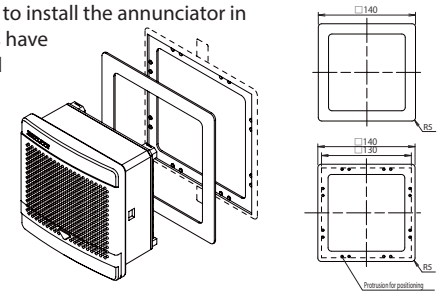

Options

PATLITE Playlist Editor 2 (Free Download)
(OS: Windows® 2000/XP/Vista/Windows 7/Windows 8)

> The new PATLITE Playlist Editor 2 is required to change the audio message data for this product.
> The SD Card does not contain any data.

SD Card (2 GB) SDV-2GP

Wiring

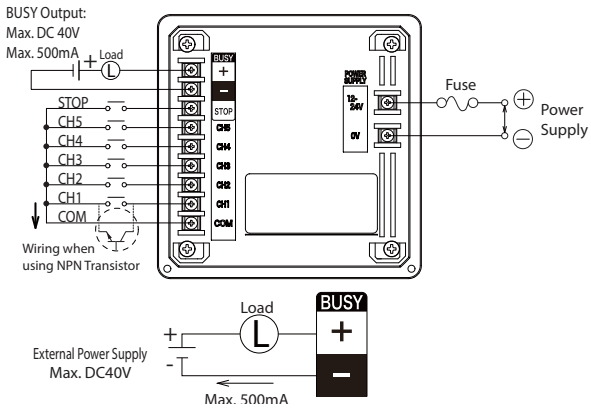

Specifications

Model	Rated Voltage	Operating Voltage Range	Power Consumption	Sound Level (Max.)	Voice File	Operating Temperature Range	Maximum Playback Time	No. of Playback Inputs	Protection Rating	Mass
BKV-31JF	DC 12-24V	DC 10.8V - 26.4V	9W	95dB (at 1m)	MPEG- Audio Layer (MP3) Standard Bit Rate: 64kb/s Fs=44.1kHz	-10 - +50°C (RH less than 85%)	63 sec.	Bit: 5 Binary: 31	IP54 (Flush-mount)	350g
BDV-31KF	AC 100V	AC 100V ±10%	10W							530g
BDV-15KF	AC 220V	AC 220V ±10%								

*Actual sound level will depend on sound type and surrounding operating conditions.

FV-127JP

MP3 File Playback Circuit Board

RoHS

127 Channels (Binary)

8 Minutes

24VDC

NPN/PNP Open-collector

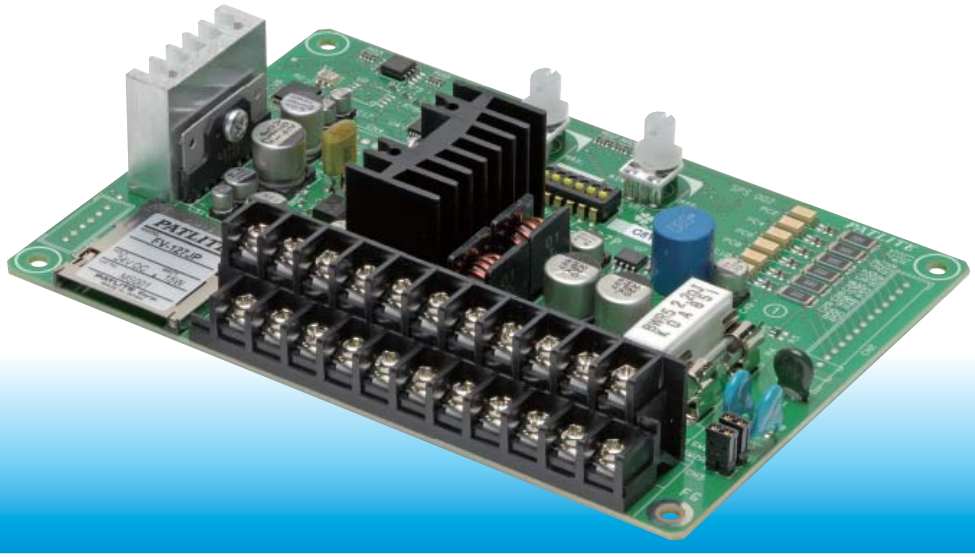

Audio messages can be registered up to 127 channels, ideal for various equipment or facility purpose where the audio message assistance is required.

FEATURES

- High quality sound and long playback time.
- MP3 compressed audio file format enables long playback time and high quality sound.
- Approximately eight minutes worth of audio messages can be stored in the onboard memory.
- Capable of 240 minutes of message playback when using an SD card as external memory. (MP3 data at standard 64kbit/s rate and 128Mb SD Card)
- Audio messages can be overwritten and reprogrammed with the Playlist Editor 2 (free download) and optional SD Card.
- Data stored in the onboard memory can be extracted to the SD Card.
- 3 sound reduction levels of -10dB, -20dB and -30dB (at 1m) can be controlled by an external signal.
- Five different playback modes are available

NOISE REDUCTION FEATURES

- Input delay can be selected (10ms or 50ms) to reduce noise
- Extending the delay to input a signal reduces noise
- Another noise countermeasure can include setting jumper pins

OTHER FEATURES

- Terminal block to provide safe and secure wire connections.
- Selectable speaker output (2W or 4W), AUX and BUSY Output terminals.
- Operating voltage range is from 19V to 29V DC (Rated Voltage: 24V DC)
- This product is compliant with the RoHS directive (DIRECTIVE 2002/95/EC)

How to Order

FV-127JP

- Model
- Message
  - 127: 127 Channels
- Body Type
  - P: Circuit Board Only
- Rated Voltage
  - J: DC 24V

Options

PATLITE Playlist Editor 2 (Free Download)
(OS: Windows® 2000/XP/Vista/Windows 7/Windows 8)

> The new PATLITE Playlist Editor 2 is required to change the audio message data for this product.

> The SD Card does not contain any data.

SD Card (2 GB) SDV-2GP

Dimensions

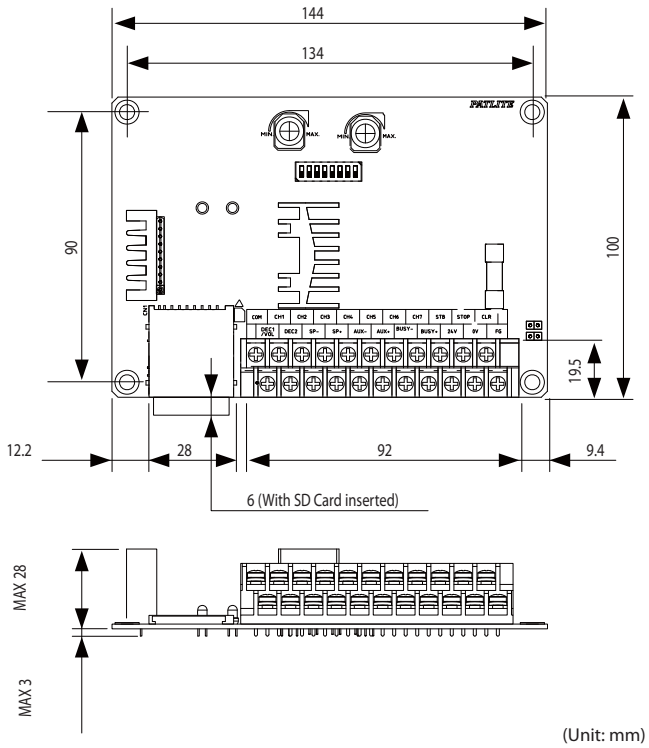

(Unit: mm)

Playback Modes

Normal Playback	Designated audio message is played back by distinctive signal input. Audio message is played back once in case of one shot input, and audio message is repeated when the signal is input continuously.
Memory Playback	Up to 23 audio message inputs can be memorized in order of input. After one playback is finished, the next memorized audio message will be played back. The inputs exceeding the limit will not be memorized.
Latest Input and Greater Channel Priority Playback	When the signal for a greater channel number is input during the message playback, the audio message being played back will be stopped, and previous audio message input will be played back. When the signal for the same or smaller channel number is input, the signal will not be accepted.
Momentary Playback	Audio message is played back only while the signal input is maintained. Playback will be stopped when the signal input is stopped.
Latest Input Priority Playback	When the signal is input during the message playback, the audio message being played back will be stopped, and the previous audio message input will be played back.

Specifications

General Specifications	
Model Name	FV-127JP
Rated Voltage	DC 24V
Operating Voltage Range	DC 19 to 29V
Wiring Method	M3 Terminal Bus
Power Consumption	Maximum 15W (1*)
Operating Temperature Range	-10 to 50°C
Storage Temperature	-40 to 80°C
Relative Humidity	85% RH or less
Operating Environment	Built-in Type Only
Installation Method	4 Screw Tie-down
Vibration Resistance	45m/s2 (30Hz forward and back/Left and right for 2hrs., up and down for 4hrs.)
Mass	160g ±10%
Outer Dimensions	144×100×28 [mm] (Lead Wires and Mounting Posts not included)
Audible Specifications	
Replay Message Number	For Binary: 127 For Bit Input: 7
Audio File Format	MPEG1-Audio Layer: (MP3)
Bit Rate	32kbit/s; 64kbit/s(Standard); 128kbit/s Fs=44.1kHz
Maximum PlaybackTime	On-board Memory (4MB): About 8 min (Recorded with standard bit rate) External Memory (SD Card): With 128MB about 240 min. (Standard Bit Rate Recording)
On-board Memory Size	4,360,191byte
Audio Start-up Time	About 260ms (When sound mute not added at beginning and end of messages)
Audio Pause Time	Unless specified, 100ms sound mute added at beginning and end of messages
Compatable Memory Card	SD Card Recommended Part No.: SDV-2GP (Sold Separate)
Card Format	FAT16
Audio Rewrite Capability	Use with Patlite Playlist Editor 2 (Free Download) and an SD Card
Audio Rewrite Time	About 180 sec. (When changing the 4MB on-board memory)
Input / Output Specifications	
Signal Input Section	CH1 , CH2 , CH3 , CH4 , CH5 , CH6 , CH7 , STB , CLR , STOP, DEC1/VOL, DEC2
Signal Input Priority	CLR Input > STOP Input > CH Input (Larger Channel takes Priority)
Sound Reduction Input	Speaker/AUX Output: Three Sound Reduction Levels of -10dB, -20dB, -30dB (1*)
Input Hold Time	More than 10ms or 50ms (Changeable Settings)
Signal Input Type	Non-voltage contact or NPN Open Collector
Speaker Output	8Ω compatable speaker of 4W or more, or 8Ω compatable speaker of 2W or more (Switchable Setting)
Maximum SoundPressure	Speaker Output at 4W: 105 dB; at 2W: 102dB (2*)
AUX Output	0dBV 600Ω (Adjustable with Volume Control or Sound Reduction Input)
BUSY Output	Maximum DC40V, 500mA

(1*) 1kHz Sine Wave Data Playback at -6dB

(2*) At 1m with 1kHz Sine Wave Data Playback and SPW-5E Speaker (Sold Separate)

This product complies with the RoHS directive (DIRECTIVE 2002/95/EC)

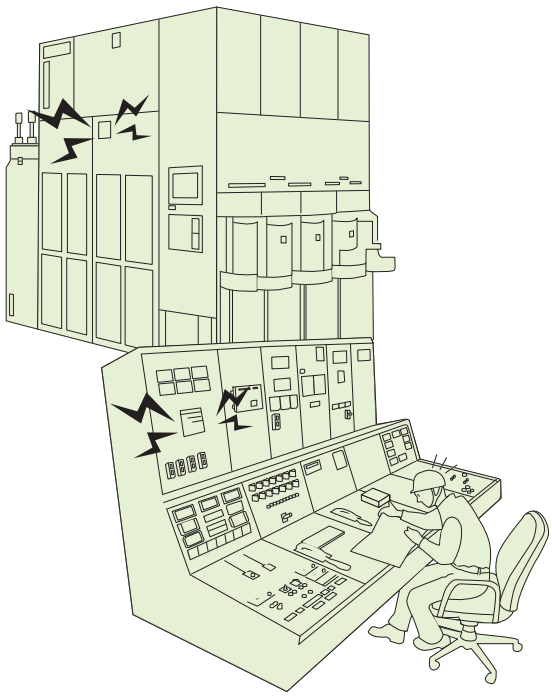

MEMO

For more details, visit our website at http://www.patlite.com

Hybrid Products

LKEH

MP3 Voice Annunciator & LED Signal Tower

RoHS CE

LED

32 Alarm Sounds

105dB at 1m

IP53

(LED) Φ100

NPN Open-collector

Get the attention you need with the PATLITE field-programmable LKEH Series Hybrid Signal Tower with audible alarm.

FEATURES

- The pre-recorded type offers 32 sounds in one unit with 8 bit input and 32 binary input channel capability.
- The message capacity for the LKEH-FV is 63 seconds (64kbit/s) with 5 bit input and 31 binary input channel capability.
- The LKEH-FV is field-programmable with an SD Card (sold separately).
- Visible from great distance with ultra-bright LEDs and 100 diameter lens.
- A 2G vibration resistant design allows safe use in a high-vibration environment.
- One common wire makes it easy to control both the audio and LED inputs.
- Volume is adjustable from 0 to 105dB (at 1m) to fit various environments.
- Compliance with the RoHS Directives makes it environmentally friendly.
- Complies with EU directives and includes the CE mark (for 24V type).

AVAILABLE BY SPECIAL ORDER

- PNP open collector transistor type.
- AC 120V type
- UL Listed (File No. E215660, for 24V type only).

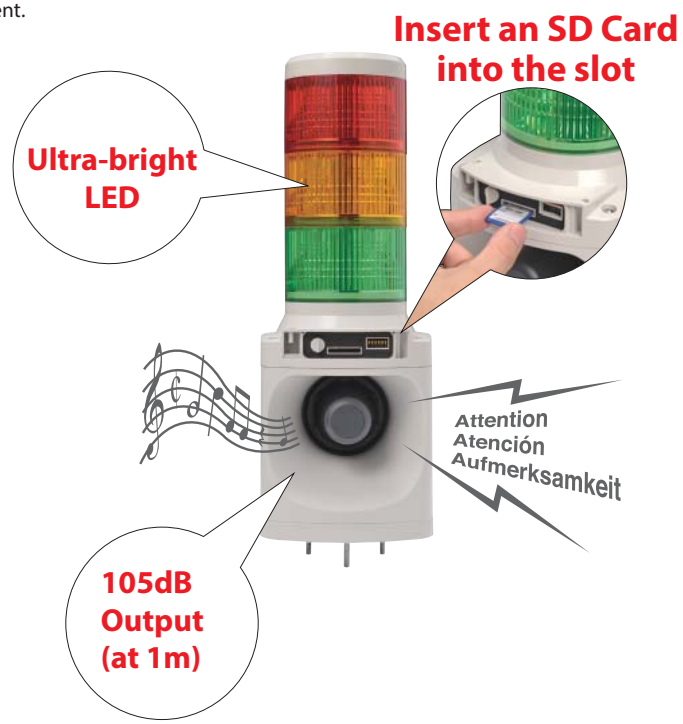

How to Order

LKEH-402FVUL-RYGB

- Model
- Tiers: 1 - 4
- Rated Voltage: 02: DC 24V; 10: AC 100V; 20: AC 220V
- Sound Type: FV: Voice Synthesizer; FA: Type A; FC: Type C; FD: Type D; FE: Type E
- UL Conformity: None: No Conformity; UL: UL Standard
- Color: R: Red; Y: Amber; G: Green; B: Blue; C: Clear/White (Top to bottom)

Use of Copyrighted Material

PATLITE Corporation has not applied for permission to use certain copyrighted music or songs recorded for Type-A, Type-C and Type-D melody charts outside of Japan. Therefore, please contact the local copyright association for permission before using the product in case this product is used outside of Japan. melody chart Type-E is recommended for use outside of Japan as this playlist does not include copyrighted music or songs, and permission is not required.

Wiring

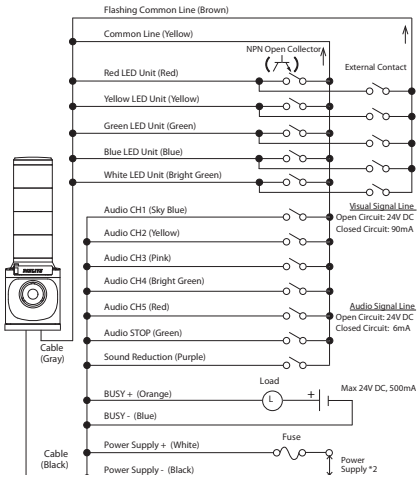

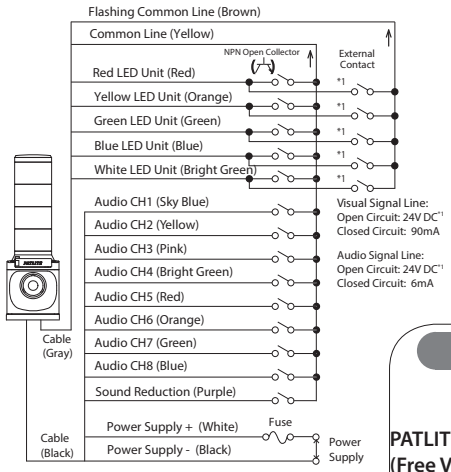

Options

Wall-mount Bracket SZ-023
Bracket Material:Steel
Cover Material: ABS Resin

Options

PATLITE Playlist Editor 2 (Free Version)
(OS: Windows® 2000/XP/Vista)

> The new PATLITE Playlist Editor 2 is required to change the audio message data for this product.

> The SD Card does not contain the Playlist Editor software or any audio messages.

SD Card (2 GB) SDV-2GP

Sound Charts

Type A			(Japan Only)
Beep (slow intermittent)	Stutter (rapid intermittent)	Bell (clear high-pitch)	Yelp (rapid siren)
Rapid Hi-Lo	Melody Chime	Synthesized Piano	Synthesized Bell
Stutter + Bell	Synthesized Melody Chime	Chime	Call Sign
Fur Elise	Maiden's Prayer	Bach Minuet in Gmaj	Annie Laurie
London Bridge is falling down	Hol-di-ri-Dia	Mary had a little Lamb	Camptown Races
Cuckoo Song	Village Blacksmith	On the Bridge of Avignon	Daydream Believer
Amaryllis	Mozart Symphony No. 40	Quiet Lakeside	Ich bin ein Musikante
Spanish Romance	Katyusha	Grandfather's Clock	Ave Maria

Type D			(Japan Only)
Beep (slow intermittent)	Stutter (rapid intermittent)	Bell (clear high-pitch)	Yelp (rapid siren)
Rapid Hi-Lo	Melody Chime	Synthesized Piano	Synthesized Bell
Runner	Mamotte Agetai	Chime	Call Sign
Iribiao Kikinagara	September	Doyoubino Koibito	Akino Kehai
Saafu Tengoku Sukii Tengoku	Iro White-blend	Happy Birthday	Hi Ho
I've been working on the Railroad	The Bear Song	Toys Go "Cha-cha-cha"	Konnako Irukana
Schubert's Lullaby	Rudolph the red-nosed Reindeer	She Wore a Yellow Ribbon	My Darling, Clementine
Yellow Rose of Texas	Yankee Doodle	When the Saints Go Marching In	Londonderry Air

Type C			(Japan Only)
Beep (slow intermittent)	Stutter (rapid intermittent)	Bell (clear high-pitch)	Yelp (rapid siren)
Rapid Hi-Lo	Melody Chime	Synthesized Piano	Synthesized Bell
Stutter + Bell	Synthesized Melody Chime	Chime	Call Sign
Can't take my eyes off of you	Top of the World	The Entertainer	Amazing Grace
Amairono Kamino Otome	Les Champs-Elysees	Canon	Rara Sunshine
Uchuusenkan Yamamoto	Oshiete	Makenaide	Gonna Fly Now (Theme from "Rocky")
I don't Wanna Miss a Thing	Yozorano Mukou	Aiwa Katsu	Haruyo Koi
Gattsudaze	Odoru Ponpokorin	Imasugu Kisu Mi	Truth

Type E			(Worldwide)
Beep (slow intermittent)	Stutter + Bell	Inverted Reveille	Annie Laurie
Stutter (rapid intermittent)	Melody Chime	Galactic Motor	London Bridge is falling down
Bell (clear high-pitch)	Chime	Ringing Phone	Mary had a little Lamb
Yelp (rapid siren)	Call Sign	Two Tone	Camptown Races
Rapid Hi-Lo	Train Ride	Alarm Clock	Amaryllis
Melody Chime	Galloping Hi-Lo	Ringing Hi-Lo	Mozart Symphony No. 40
Synthesized Piano	Alien Chatter	Fur Elise	Ave Maria
Synthesized Bell	Falling Crystals	Bach Minuet in Gmaj	Grandfather's Clock

Specifications

Model	Rated Voltage	Operating Voltage Range	Number of Tiers	Power Consumption	Mass
LKEH- 102F	DC 24V	DC 24V ±10%	1	10.6W	1.4kg
LKEH- 202F			2	12.4W	1.6kg
LKEH- 302F			3	14.2W	1.8kg
LKEH- 402F			4	16.0W	2.0kg
LKEH- 110F	AC 100V	AC 100V ±10%	1	17.0W	2.1kg
LKEH- 210F			2	20.0W	2.3kg
LKEH- 310F			3	23.0W	2.5kg
LKEH- 410F			4	26.0W	2.7kg
LKEH- 120F	AC 220V	AC 220V ±10%	1	17.0W	2.1kg
LKEH- 220F			2	20.0W	2.3kg
LKEH- 320F			3	23.0W	2.5kg
LKEH- 420F			4	26.0W	2.7kg

(Note) The sound pressure level is based on measurements under controlled conditions (voice-synthesized 1 kHz sine wave played back from a distance of 1 meter), therefore the surrounding environmental conditions and message content will result in different values for the sound pressure level.

※) Even when starting two or more units simultaneously, a lag will occur during message playback.

Dimensions

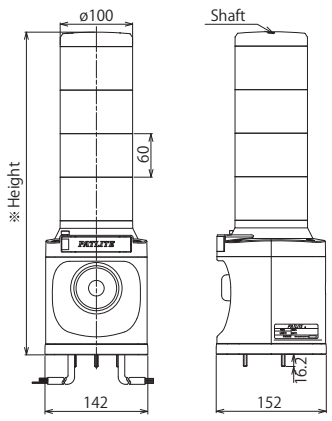

※Height
1 Tier: 265.2
2 Tiers: 325.3
3 Tiers: 385.4
4 Tiers: 445.5

Mounting Dimensions

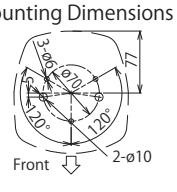

(Unit: mm)

RFT

Audible Alarm & LED Tower

RoHS CE

LED

90dB at 1m

32 Alarm Sounds

IP54

□115

NPN Open-collector

An LED Rotating Light with built-in alarm sounds controllable by binary or bit input for a maximum of 32 sounds!

FEATURES

- Sound reduction feature to drop the volume by about 10dB (at 1m) when an input signal is received (Binary Mode only).
- Using an SD Card can allow customization of one sound group to be re-arranged using any of the pre-installed sounds.
- Compliance with the RoHS Directives makes it environmentally friendly.
- Complies with EU directives and includes the CE mark (for 24V type).
- Can be controlled with NPN open-collector transistor inputs.
- A side panel access allows easier volume adjustment.
- Produces a loud sound of up to 90dB (at 1m)

How to Order

RFT-24A-R

Rated Voltage
- 24 : DC 24V
- 100: AC 100V
- 220: AC 220V

Sound Type
- A: A Type
- C: C Type
- D: D Type
- E: E Type

Globe Color
- R: Red
- Y: Amber
- G: Green
- B: Blue

Side access design enables easy post-installation maintenance

The sound reduction function reduces the volume by approx. -10dB (at 1m), a feature ideal for use at night time together with a timer or sensor.

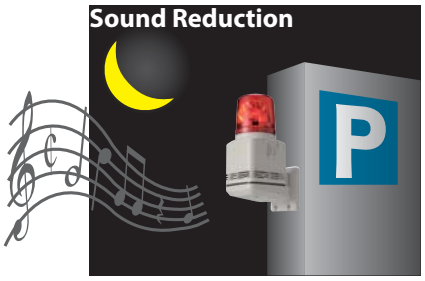

Type E

Beep (slow intermittent)	Stutter + Bell	Inverted Reveille	Annie Laurie
Stutter (rapid intermittent)	Melody Chime	Galactic Motor	London Bridge is falling down
Bell (clear high-pitch)	Chime	Ringing Phone	Mary had a little Lamb
Yelp (rapid siren)	Call Sign	Two Tone	Camptown Races
Rapid Hi-Lo	Train Ride	Alarm Clock	Amaryllis
Melody Chime	Galloping Hi-Lo	Ringing Hi-Lo	Mozart Symphony No. 40
Synthesized Piano	Alien Chatter	Fur Elise	Ave Maria
Synthesized Bell	Falling Crystals	Bach Minuet in Gmaj	Grandfather's Clock

Wiring

RFT

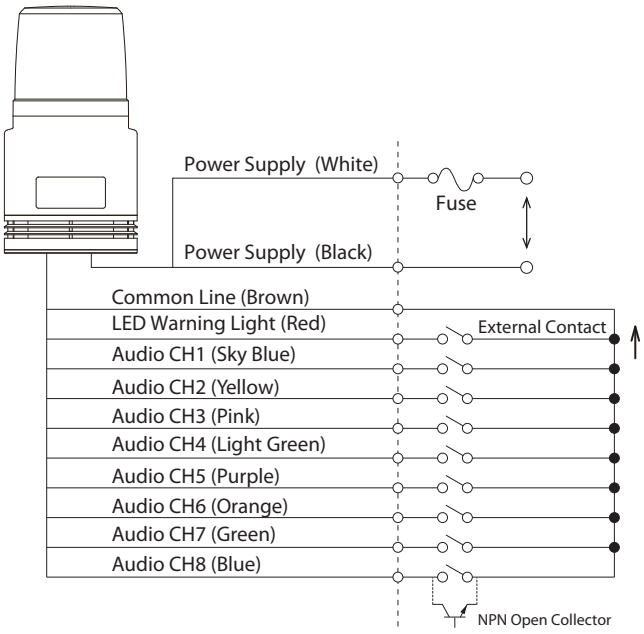

Options

- RF-001: Wall Mount Bracket

- RF-002 Ceiling Mount Bracket

Options

PATLITE Playlist Editor 2 (Free Version)

(OS: Windows® 2000/XP/Vista)

> The new PATLITE Playlist Editor 2 is required to change the audio message data for this product.

> The SD Card does not contain the Playlist Editor software or any audio messages.

SD Card (2 GB) SDV-2GP

Dimensions

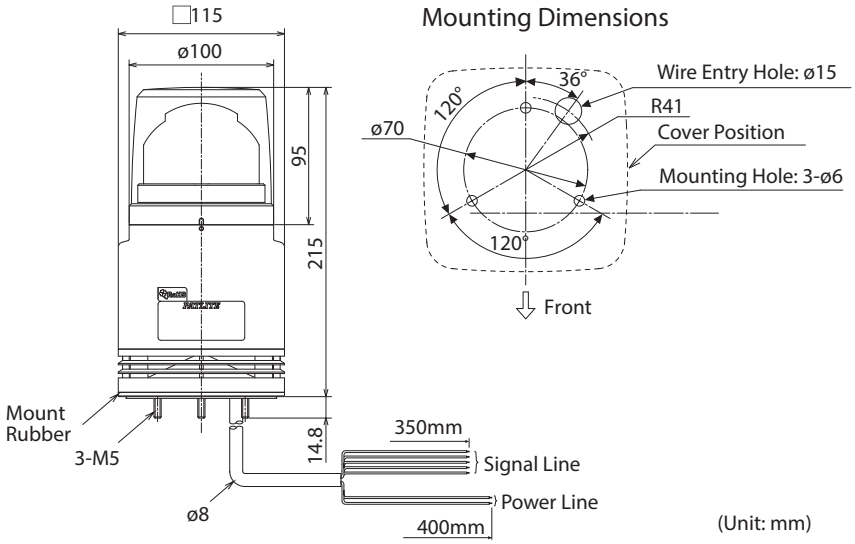

(Unit: mm)

Specifications

Series	Model	Rated Voltage	Operating Voltage Range	Maximum Power Consumption	Sound Level	Operating Temperature Range	Flashes per Minute	Protection Rating	Vibration Resistance	Mass
RFT	RFT-24	DC 24V	DC 24V ±10%	12 W	Max. 90dB (at 1m)	-10°C - +50°C (85%RH or less)	115 ±15	IP54 (When Flush-mounted)	19.6m/s²	1.0kg
	RFT-100	AC 100V	AC 100V ±10%	13 W						1.2kg
	RFT-220	AC 220V	AC 220V ±10%	13 W						

Actual sound level will depend on sound type and operating conditions.

※) Even when starting two or more units simultaneously, a lag will occur during message playback.

RFV

MP3 Voice Annunciator & LED Signal Tower

LED

15 Channels (Binary)

95dB at 1m

IP54

□115

NPN/PNP Open-collector

The RFV series is a combination of LED rotating beacon light and MP3 programmable sound unit.

FEATURES

- Field-programmable with an SD Card (sold separately).
- Message capacity of 63 seconds (64kbit/s) with bit input of 4 channels and 15 channels by binary input.
- Volume is adjustable from 0 to 95dB (at 1m) to fit various environments.
- A 4.5G vibration resistant design allows safe use in a high-vibration environment.
- Other Unique Features:

1. Maintenance reduced with long service ultra-bright LEDs that can last over 5 years with 24/7 continuous operation.
2. Highly-visible with a special optical reflector design.
3. Special gear-driven mechanism provides reliability, even after 10 years of no operation.
4. Tight-locking dome stays on, even in high vibration environments.
5. Designed for inverted installation.

AVAILABLE BY SPECIAL ORDER

- PNP open collector transistor type.

Voice message is field programmable with an SD card (sold separately), and the volume can be easily accessed from the side panel, even after installation.

The sound reduction function reduces the volume by approx. -15dB (at 1m), a feature ideal for use at night time together with a timer or sensor.

How to Order

RFV-24F-R

Rated Voltage	Globe Color
24: 24V DC	R:Red
100: 100V AC	Y: Amber
220: 220V AC	B: Blue

Use of Copyrighted Material

PATLITE Corporation has not applied for permission to use certain copyrighted music or songs recorded for Type-A, Type-C and Type-D melody charts outside of Japan. Therefore, please contact the local copyright association for permission before using the product in case this product is used outside of Japan. melody chart Type-E is recommended for use outside of Japan as this playlist does not include copyrighted music or songs, and permission is not required.

Wiring

RFV

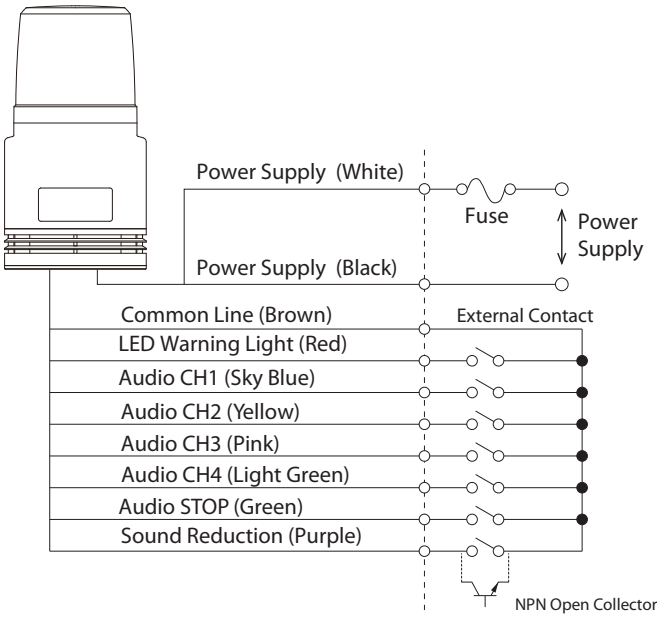

Options

- RF-001: Wall Mount Bracket

- RF-002 Ceiling Mount Bracket

Dimensions

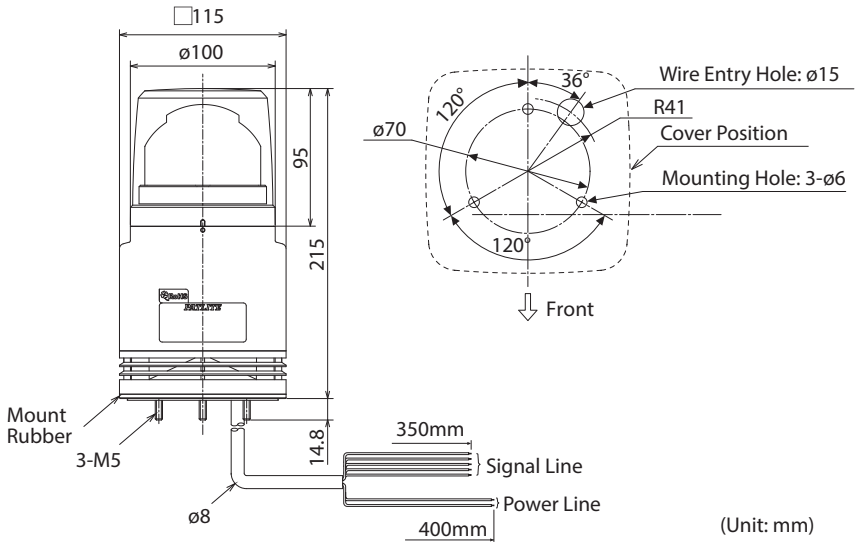

(Unit: mm)

Options

PATLITE Playlist Editor 2 (Free Version)

(OS: Windows® 2000/XP/Vista)

> The new PATLITE Playlist Editor 2 is required to change the audio message data for this product.

> The SD Card does not contain the Playlist Editor software or any audio messages.

SD Card (2 GB) SDV-2GP

Specifications

Series	Model	Rated Voltage	Operating Voltage Range	Maximum Power Consumption	Sound Level	Operating Temperature Range	Flashes per Minute	Protection Rating	Vibration Resistance	Mass
RFV	RFV-24	DC 24V	DC 24V ±10%	18 W	Max. 95dB (at 1m)	-10°C - +50°C (85%RH or less)	115 ±15	IP54 (When Flush-mounted)	19.6m/s²	1.0kg
	RFV-100	AC 100V	AC 100V ±10%	16W						1.2kg
	RFV-220	AC 220V	AC 220V ±10%							

Actual sound level will depend on sound type and operating conditions.

※) Even when starting two or more units simultaneously, a lag will occur during message playback.

RT

Hybrid MP3 & Revolving Light

CE

Bulb

32 Alarm Sounds

105dB at 1m

63 Seconds

IP23

NPN Open-collector

Large horn with revolving warning light featuring clear sound up to 105dB (at 1m).

FEATURES

- Built-in Adjustable alarm with a sound of up to 105dB (at 1m).
- High sound quality with the MP3 voice synthesizer (RT-VF only).
- Installation is in the upright position only.
- Dome is made of superior weather-resistant and light-translucent acrylic resin.
- Available colors are Red, Amber, Green, and Blue.
- Complies with EU directives and includes the CE mark (for 24V type).

AVAILABLE BY SPECIAL ORDER

- Cable: Versatile and flexible 3m cable
- AC 120V type
- IP65 rating
- UL Conformity

Horn Configuration Concept

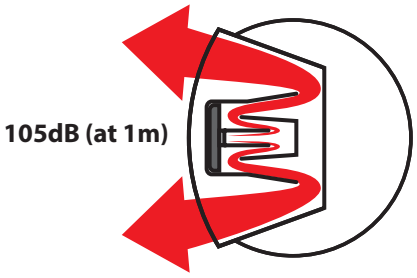

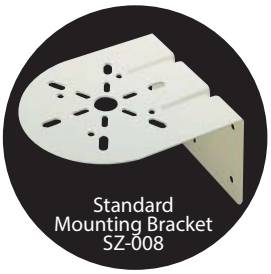

How to Order

RT-24VF-R

Rated Voltage
24 : DC 24V
100: AC 100V
200: AC 200V

Sound
VF: Voice Synthesizer
A: Type A
C: Type C
D: Type D
E: Type E

Color
R: Red
Y: Amber
G: Green
B: Blue

Dimensions

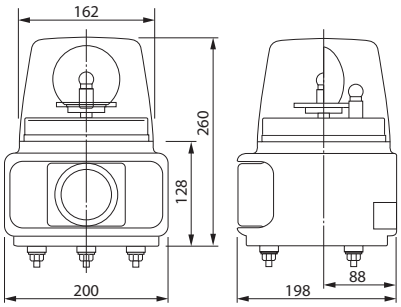

Mounting Dimensions

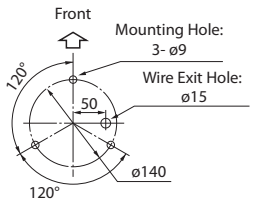

(Unit: mm)

Wiring

RT-A/C/D/E

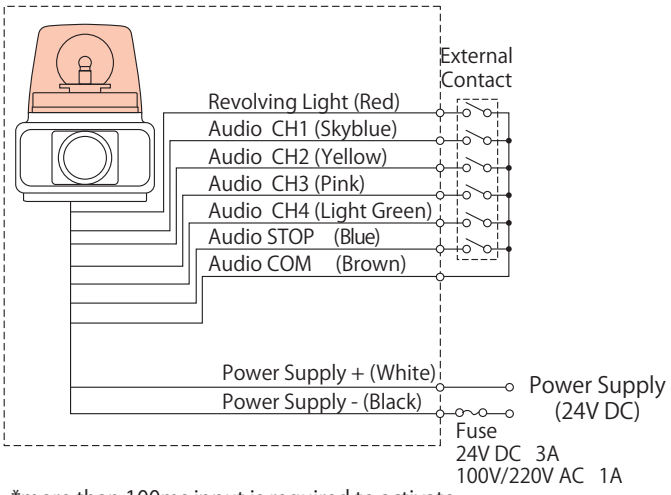

*more than 100ms input is required to activate.

Channel Priority:
4 (Light Green) > 3 (Pink) > 2 (Yellow) > 1 (Skyblue)
The greater number has priority when any of the channels are activated simultaneously.

RT-FV

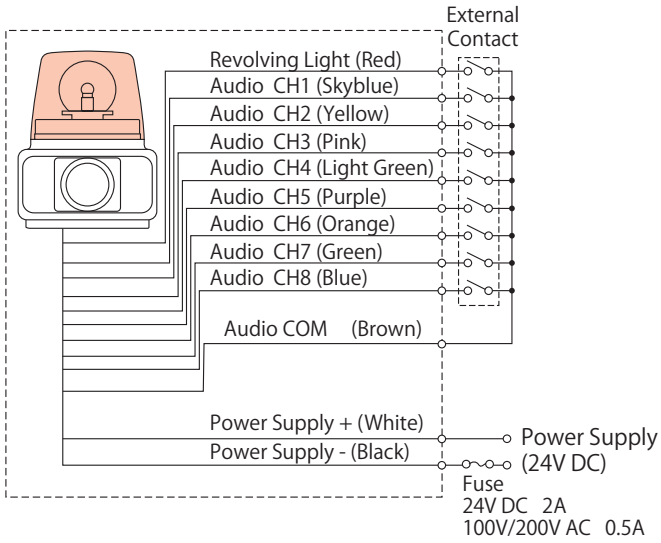

Channel Priority:
8 (Blue) > 7 (Green) > 6 (Orange) > 5 (Red) > 4 (Light Green) > 3 (Pink) > 2 (Yellow) > 1 (Skyblue)
The greater number has priority when any of the channels are activated simultaneously.

Specifications

Series	Model	Rated Voltage	Operating Voltage Range	Power Consumption	Bulb		Sound Level	Operating Temperature Range	Rotations per Minute	Sound Level	Channel Input	Mass
					Ratings	Repl. No.						
Voice	RT-24VF	DC 24V	DC 21 - 27V	24 W	24V 20W	55	Max. 90dB (at 1m)	-10°C - +50°C (85%RH or less)	115	Max. 105dB (at 1m)	Bit: 4 Binary: 15	2.0kg
	RT-100VF	AC 100V	AC 90 - 100V	32 W	12V 15W	54			105			2.4kg
	RT-220VF	AC 220V	AC180 - 240V	30 W					95			
Sound	RT-24□	DC 24V	DC 21 - 27V	24 W	24V 20W	55	Max. 95dB (at 1m)		115		Bit: 8 Binary: 32	2.0kg
	RT-100□	AC 100V	AC 90 - 100V	32 W	12V 15W	54			105			2.5kg
	RT-220□	AC 220V	AC180 - 240V	30 W					95			

Actual sound level will depend on sound type and operating conditions.
※) Even when starting two or more units simultaneously, a lag will occur during message playback.

Sound Chart

Type E			
Beep (slow intermittent)	Stutter + Bell	Inverted Reveille	Annie Laurie
Stutter (rapid intermittent)	Melody Chime	Galactic Motor	London Bridge is falling down
Bell (clear high-pitch)	Chime	Ringing Phone	Mary had a little Lamb
Yelp (rapid siren)	Call Sign	Two Tone	Camptown Races
Rapid Hi-Lo	Train Ride	Alarm Clock	Amaryllis
Melody Chime	Galloping Hi-Lo	Ringing Hi-Lo	Mozart Symphony No. 40
Synthesized Piano	Alien Chatter	Fur Elise	Ave Maria
Synthesized Bell	Falling Crystals	Bach Minuet in Gmaj	Grandfather's Clock

Use of Copyrighted Material

PATLITE Corporation has not applied for permission to use certain copyrighted music or songs recorded for Type-A, Type-C and Type-D melody charts outside of Japan. Therefore, please contact the local copyright association for permission before using the product in case this product is used outside of Japan. melody chart Type-E is recommended for use outside of Japan as this playlist does not include copyrighted music or songs, and permission is not required.

KJT

Melody/Alarm & LED Tower

Model DEB LED Lamp
Recommended Product
For more details on Model DEB Refer to the "Replacement Bulb" Section at the end of this Catalog

SOUND ALARM

Bulb

8 Channels (Bit)

95dB at 1m

IP23

□116

NPN Open-collector

Multi-tiered Revolving Warning Light integrated with voice synthesizer or melody alarm for various applications.

FEATURES

- Eight Channels for Bit Input. (Binary Input: 32)
- Lens is made of superior weather-resistant and light-translucent acrylic resin.
- Built-in adjustable sound of up to 95dB (at 1m) with volume control.
- Warning lights and alarms can be controlled together or separately.
- Available Colors are in Red, Amber, Green, and Blue.
- Installation is available in the upright position only.

Sound Chart

Type E			
Beep (slow intermittent)	Stutter + Bell	Inverted Reveille	Annie Laurie
Stutter (rapid intermittent)	Melody Chime	Galactic Motor	London Bridge is falling down
Bell (clear high-pitch)	Chime	Ringing Phone	Mary had a little Lamb
Yelp (rapid siren)	Call Sign	Two Tone	Camptown Races
Rapid Hi-Lo	Train Ride	Alarm Clock	Amaryllis
Melody Chime	Galloping Hi-Lo	Ringing Hi-Lo	Mozart Symphony No. 40
Synthesized Piano	Alien Chatter	Fur Elise	Ave Maria
Synthesized Bell	Falling Crystals	Bach Minuet in Gmaj	Grandfather's Clock

How to Order

KJT-302A-RYG

- Model
- Tiers: 1 - 3
- Rated Voltage: 02: DC 24V; 10: AC 100V; 20: AC 200V
- Sound Type: A: Type A; C: Type C; D: Type D; E: Type E
- Color: R: Red; Y: Amber; G: Green; B: Blue (Top to bottom)

Use of Copyrighted Material

PATLITE Corporation has not applied for permission to use certain copyrighted music or songs recorded for Type-A, Type-C and Type-D melody charts outside of Japan. Therefore, please contact the local copyright association for permission before using the product in case this product is used outside of Japan. melody chart Type-E is recommended for use outside of Japan as this playlist does not include copyrighted music or songs, and permission is not required.

Dimensions

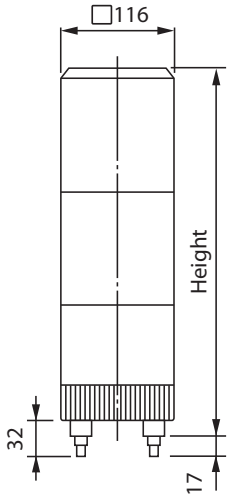

Height (mm)
1 Tier: 232
2 Tiers: 337
3 Tiers: 442

Mounting Dimensions

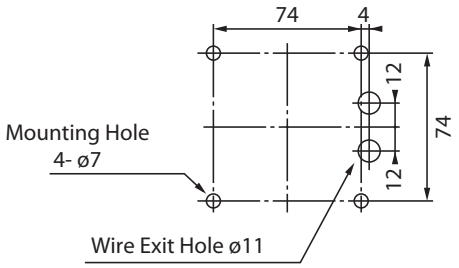

(Unit: mm)

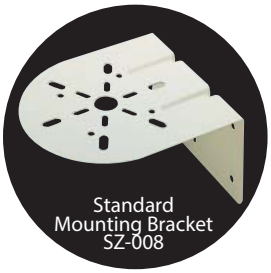

Wiring

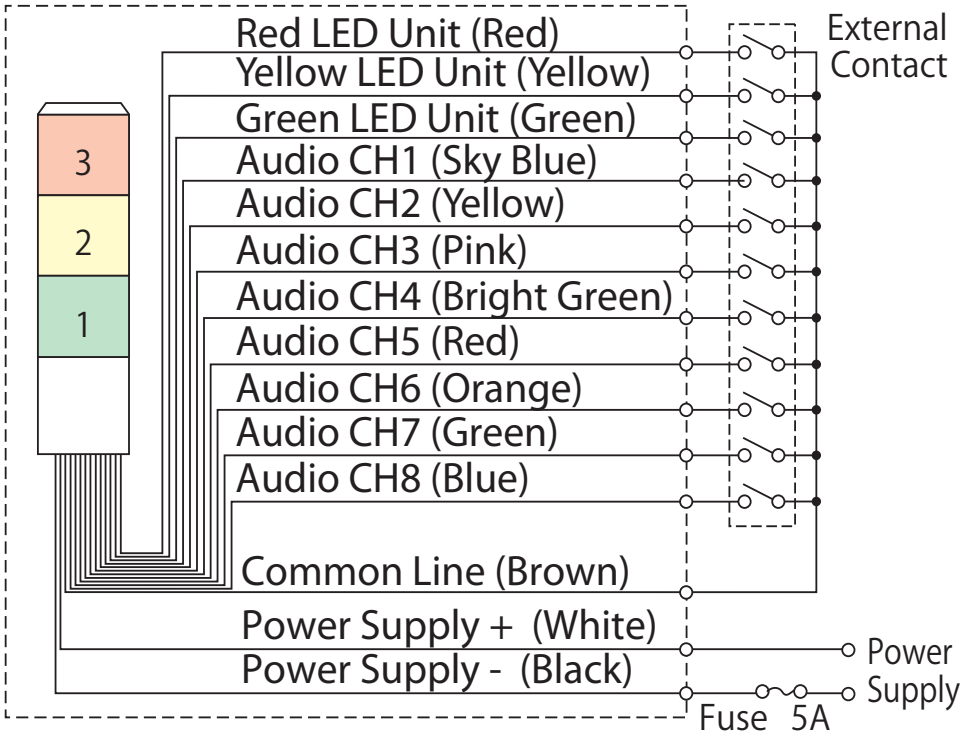

Channel Priority:
8 (Blue) > 7 (Green) > 6 (Orange) > 5 (Red) > 4 (Light Green) > 3 (Pink) > 2 (Yellow) > 1 (Skyblue)
The greater number has priority when any of the channels are activated simultaneously.

Specifications

Model			Rated Voltage	Operating Voltage Range	Power Consumption	Bulb		Rotations per Minute	Sound Level	Operating Temperature Range	Channels	Mass
						Ratings	Repl. No.					
Alarm/ Melody	1 Tier	KJT- 102	24V AC/DC	AC/DC 21 - 27V	25W/18W	24V 10W	10	135	95dB (at 1m)	-20°C - +50°C (85%RH or less)	8 Ch	1.4kg
		KJT- 110	AC 100V	AC 90 - 110V	20W	12V 5W	12	120				1.7kg
		KJT- 120	AC 200V	AC 180 - 240V								
	2 Tier	KJT- 202	24V AC/DC	AC/DC 21 - 27V	36W/28W	24V 10W	10	135				2.0kg
		KJT- 210	AC 100V	AC 90 - 110V	26W	12V 5W	12	120				2.4kg
		KJT- 220	AC 200V	AC 180 - 240V								
	3 Tier	KJT- 302	24V AC/DC	AC/DC 21 - 27V	47W/38W	24V 10W	10	135				2.6kg
		KJT- 310	AC 100V	AC 90 - 110V	32W	12V 5W	12	120				3.0kg
		KJT- 320	AC 200V	AC 180 - 240V								

MEMO

For more details, visit our website at http://www.patlite.com

Optional Parts

Optional Parts

Wall Mount Bracket

- **Avoid Potential Trouble when moving machinery!**
- **Easily removable connection! (Wiring unplugs along with it!)**
- **Easy to disconnect when needing repair!**

BEFORE · · ·

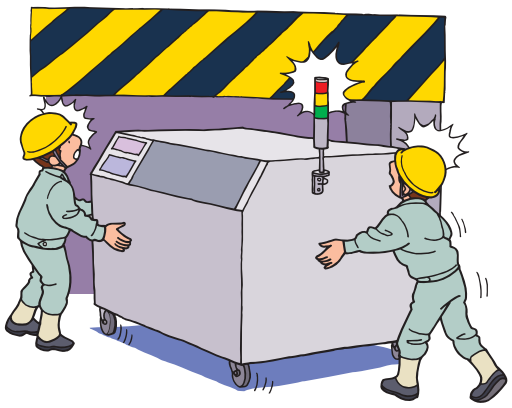

AFTER · · ·

Easy steps to installing the bracket

Drill the holes on the machine to attach the mounting connector and bracket.

Fix the mounting parts onto the machine with the proper hardware.

Join the connectors together.

Hook the mounting bracket onto the metal tabs and attach it with the screws.

SZ-020 (For φ21.7mm Pole)
SZ-021 (For φ17.3mm Pole)

Mounting Dimensions

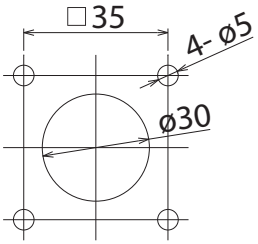

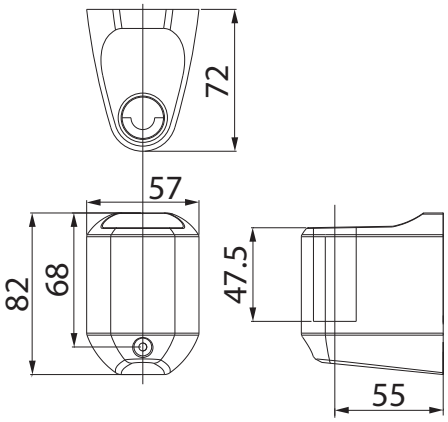

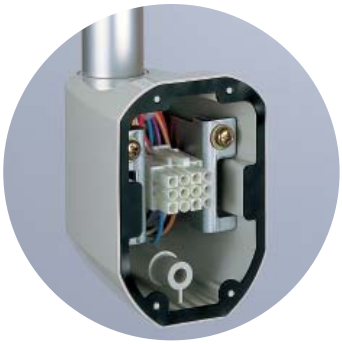

Wire connector SZ-020-001
(Sold Separately)

MP-B

Signal Tower Option

RoHS CE

Φ30

85db at 1m

Electronic Sound 1

FEATURES

- Double-insulation for enhanced durability and safety
- Direct mount installation with just a single screw
- Main body made of heat resistant ABS resin for superior impact resistance
- Compatible with the MP and MPS Signal Tower
  (The Red module is required when using the optional MP-B)

Specifications

Model	Rated Voltage	Sound Level	Power Consumption
◎ MP-B	AC/DC 24V	80dB (at 1m)	0.7W

◎ Requires Red LED Module

Part Names and Dimensions

- Operates in conjunction with the Red LED module (Alarm activation with other colors must be special ordered).

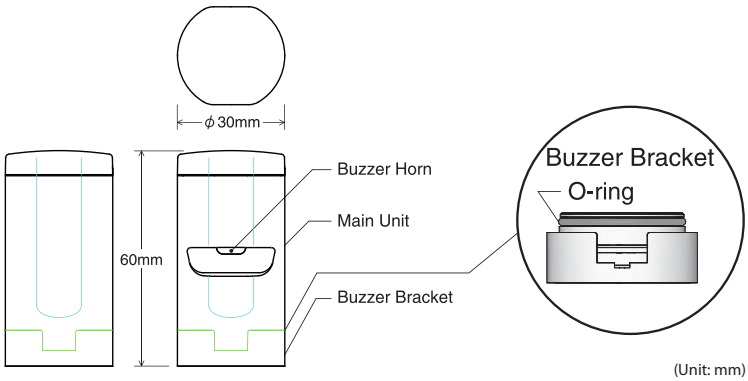

(Unit: mm)

DEB

LED Lamp

FEATURES

- LED Color emits a Warm White color
- Suitable lighting for Patlite Compatible Rotating Lamp Series.
- Replacable with AC Lamp Bulbs for Patlite Products.

COMPATIBLE MODELS:

SKH-110A/120A, SKHB-100A/200A, SKH-100EA/200EA
RH/RK(B)-100A/120AUL/200A/240AUL
WH/WK(B)(S)-100A/200A
KJS(B)-110/210/310/120/220/320
KJ(B)-110/210/310/410/120/220/320/420
KJT-110/210/310/120/220/320

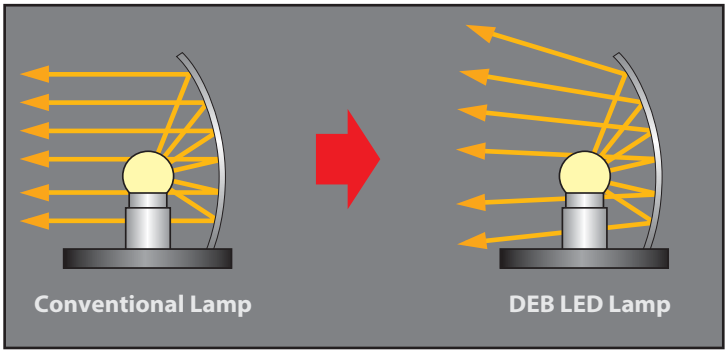

Specifications

Model	Rated Voltage	Power Consumption	LED Color	Lamp Base	Mass
DEB-15SBA-CL	AC 12V	1.7W (at AC13.5V)	Warm White	BA15S	9.8g

Wall Mount Bracket

SZ-018

Ivory White

SZ-018U

Silver

SZ-018K

Black

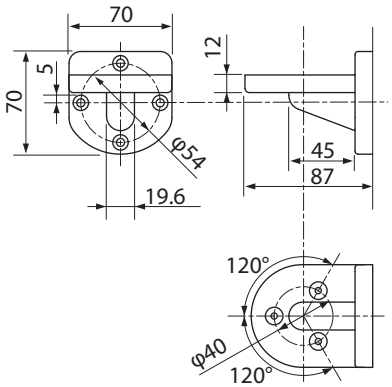

SZ-028

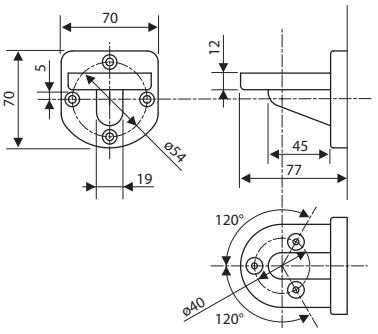

SZ-017

(For φ21.7mm Pole)

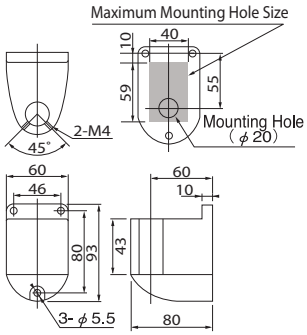

SZ-012 (Pole not included)

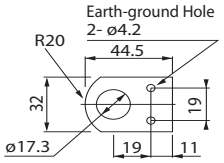

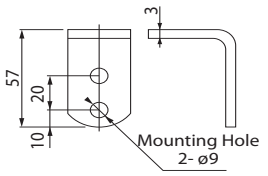

SZ-013 (Pole not included)

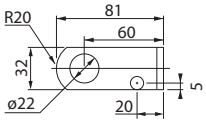

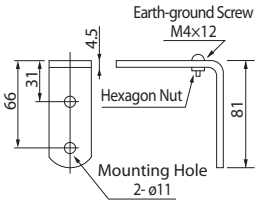

SZ-023

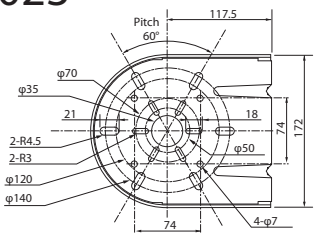

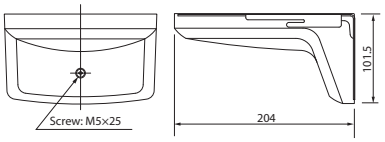

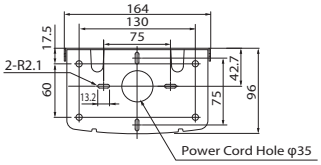

SZ-007

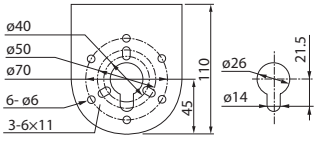

SZ-008

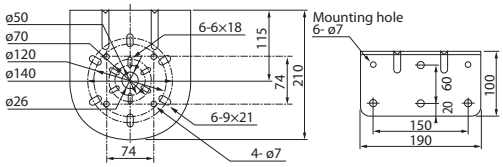

Model	Material	Compatable Models
SZ-017	Aluminum Alloy Die-cast	LME, RUP
SZ-018	PBT/ABS Resin	LU7, LME, LHE
SZ-028		
SZ-020	ABS Resin	LU5, LU7, LME, LMS, RUP, LC, LCS, LE, LES-A
SZ-021		
SZ-007	Electro-galvanized Steel	LU7, LHE-A, Pitch for φ50, φ70, φ120, φ140 and 74mm^2
SZ-008		
SZ-023	Bracket: Steel Bracket Cover: ABS	Pitch for φ50, φ70, φ120, φ140, and 74mm^2
SZ-012	Hot-rolled Mild Steel	LCE, LCS, LE, LES, LME, ME, MP
SZ-013		

Mounting Pole

φ50 (φ40)

SZ-60L
SZ-80L

Includes SZ-012

SZ-60L

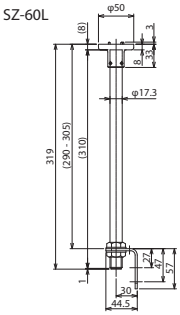

SZ-80L

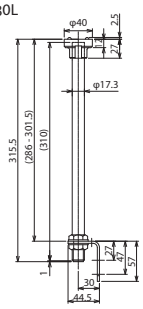

SZ-60T

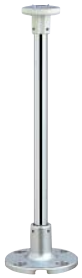

Includes SZ-011

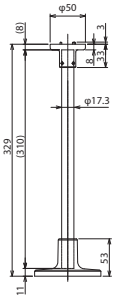

φ60

SZ-70L

Includes SZ-013

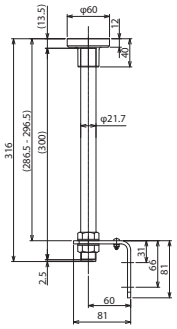

φ70

SZ-50L

Includes SZ-013

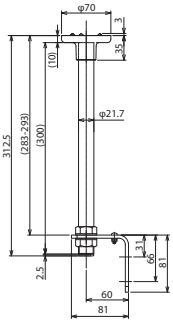

SZ-50T

Includes SZ-010

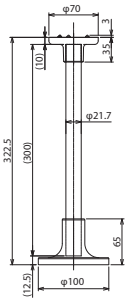

70 sq.

SZ-40L

Includes SZ-013

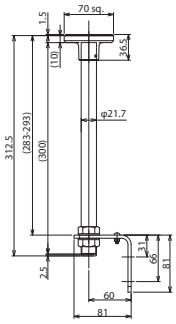

SZ-40T

Includes SZ-010

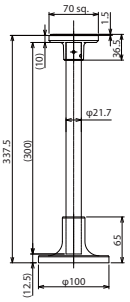

φ81

SZ-30L

Includes SZ-013
Cannot use with Rubber Gasket.

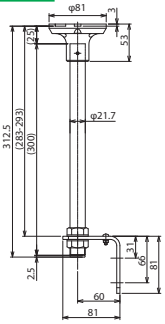

SZ-30T

Includes SZ-010
Cannot use with Rubber Gasket.

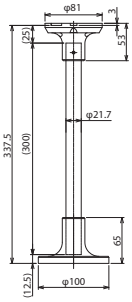

Model	Material					
	Upper Bracket	Pole	'L' Bracket	Cord Bushing	Mounting Bracket	Compatable Models
SZ-80L	ABS Resin	Carbon-steel Pipe	SPHC	6/6 Nylon	—	LCE-W
SZ-60L	ADC12		SPHC	6/6 Nylon	—	LE-W, LES-AW
SZ-60T			—	—	ADC12	
SZ-70L	ABS Resin	Carbon-steel Pipe	SPHC	EPT	—	LME-W
SZ-50L	ADC12		SPHC	EPT	—	LU7, LHE-A
SZ-50T			—	—	ADC12	
SZ-40L	ADC12	Carbon-steel Pipe	SPHC	EPT		KUS
SZ-40T			—	—	ADC12	
SZ-30L	ABS Resin		SPHC	EPT	—	RLE, RU, RH, PS, PES-A
SZ-30T			—	—	ADC12	

ADC12: Aluminum Alloy Die-cast
SPHC: Hot Rolled Milled (Sheet) Steel
EPT: Ethylene Propylene Rubber

Mounting Bracket

SZ-010

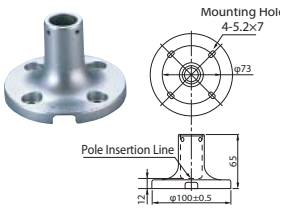

SZ-011

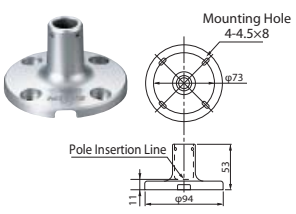

SZ-016A

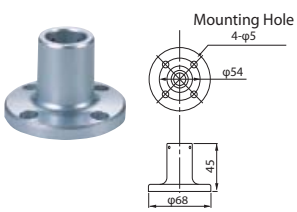

SZ-70-B

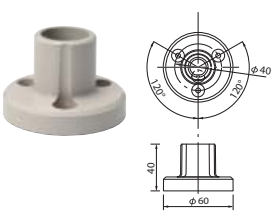

SZ-014

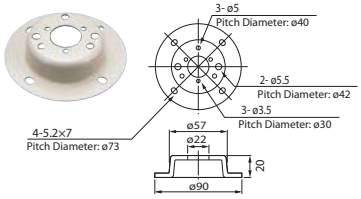

Model	Material	Compatable Models
SZ-010	Aluminum Alloy Die-cast	RUP, LME, LMS, LHE
SZ-011		LCE, LCS, LE, LES-A
SZ-016A		LU5, LU7, RUP, LME, LMS, LHE
SZ-014	Cold-rolled Milled Steel	LE, LES-A
SZ-70-B	ABS	φ21.7mm Pole

LU7 Upper Bracket

SZ-50-U

Ivory White

SZ-50U-U

Silver

SZ-50NPT

SZ-50K-U

Black

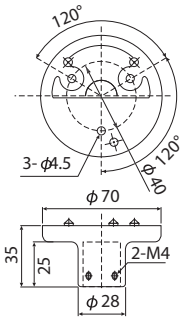

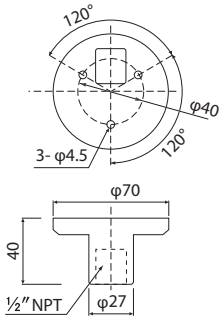

LU5 Upper Bracket

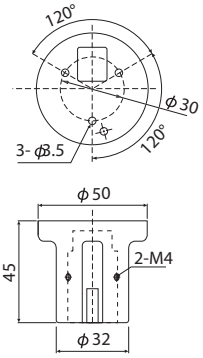

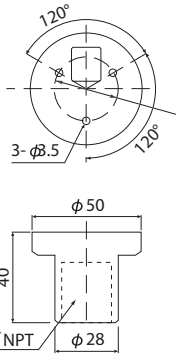

Pole

Steel Pole

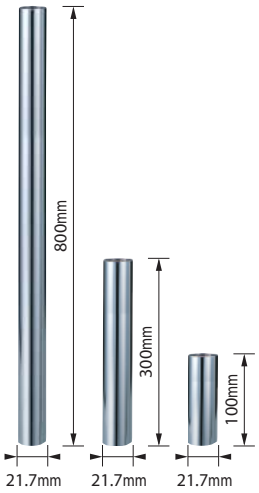

800mm	: **POLE-800S21**
300mm	: **POLE-300S21**
100mm	: **POLE-100S21**

Aluminum Pole

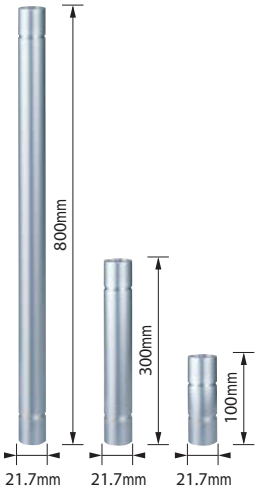

800mm	: **POLE-800A21**
300mm	: **POLE-300A21**
100mm	: **POLE-100A21**

Black Aluminum Pole

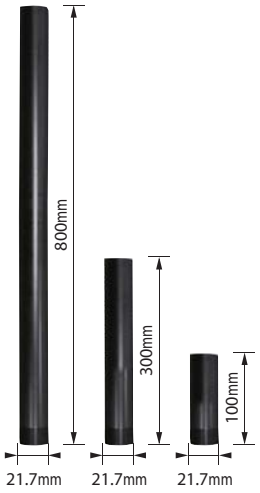

800mm	: **POLE-800A21K**
300mm	: **POLE-300A21K**
100mm	: **POLE-100A21K**

NPT Adaptor

SZ-904

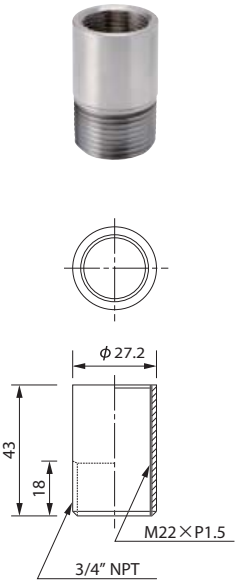

SZ-903

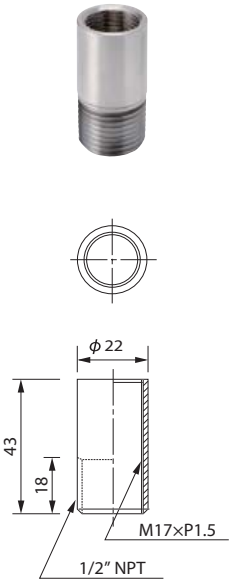

Rubber Gasket

SZ-200A RoHS

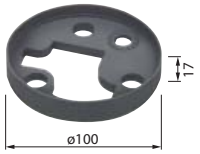

Model	Material	Compatable Models
SZ-200A	Ethylene Propylene Rubber	RH(B)
SZ-210		RU, RLE, PSE, PES

Mounting Dimensions

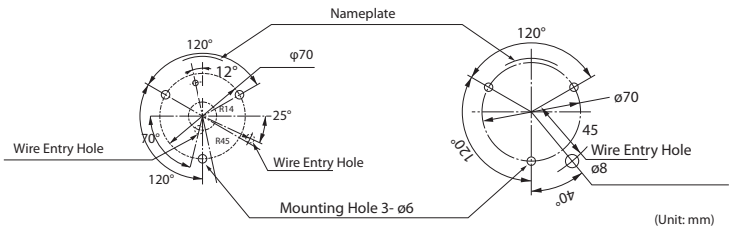

(Unit: mm)

SZ-210 RoHS

Mounting Dimension

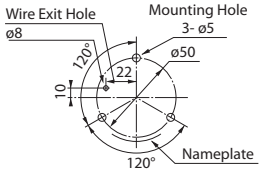

(Unit: mm)

LS7 Options

Wall Mounting Bracket SZ-110

SZ-110

SZ-110S

SZ-110D

Multi-mount Bracket SZ-130

SZ-130

SZ-130S

SZ-130D

Platform Bracket SZ-100

SZ-100

SZ-100S

SZ-100D

Front (Audible Alarm Opening)

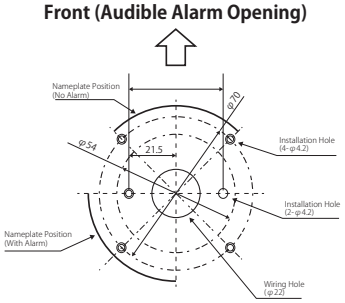

Outer Cover for LS7*
Part No.:
B45110011-F1

Replacement Parts

O-ring for LS7
Part No.:
Z35721039-F1

Mount Cover for LS7 (Accessory)
Part No.:
B81910001-F1

M12 Connector & Cable
SZ-120-02 Cable Length 2m (XS2F-D821-DH0-R)
SZ-120-05 Cable Length 5m (XS2F-D821-GH0-R)
SZ-120-10 Cable Length 10m (XS2F-D821-JH0-R)
* Only for connecting to the LS7.

CLA Options

Rear Attachment
(Magnetic Mount)
Model SZ-310ARM

Side Attachment
(Screw Mount)
Model SZ-310AS

Side Attachment
(CLB-24N Compatible)
Model SZ-310ASB

Rear Attachment
(Stainless Steel Screw Mount)
Model SZ-310EU

CLK Options

M12 Quick Disconnect

4-wire M12 Socket Cable, 5m (No. 1536308)
4-wire M12 SUS Socket Cable, 5m (No. 1552447)

Daisy Link at a maximum of 5 Units

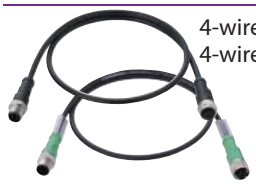

4-wire M12 Link Cable, 0.6m (No. 1518892)
4-wire M12 SUS Link Cable, 0.6m (No. 1552638)

One-touch Installation

CLK-001

Angle Adjustment Bracket

SZ-320KS

Surface-mounting Bracket

SZ-330KP

NHL Options

Wall Mount Bracket NH-WST

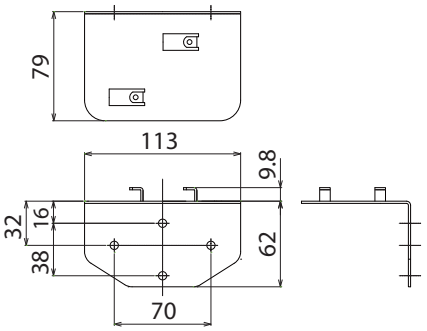

Partition Bracket NH-PST

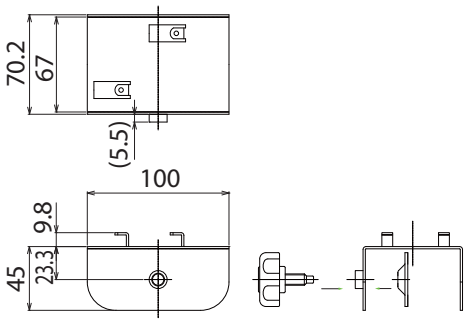

BKV Options

BK-001 Size Adjustment Bracket

This bracket is used to install the annunciator in a place where holes have already been drilled for legacy PATLITE Products (φ133mm² Type)

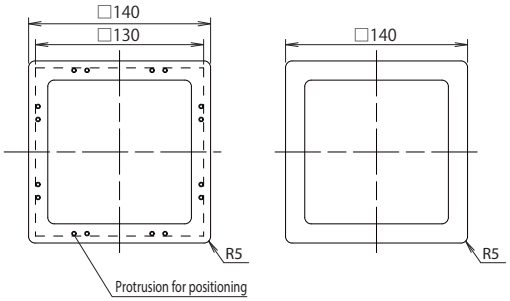

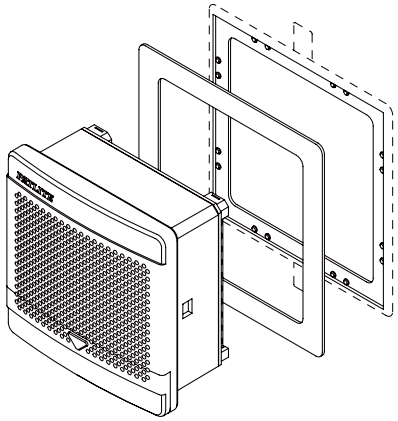

RFT/RFV Options

Wall Mount Bracket

RF-001 Wall Mount Bracket

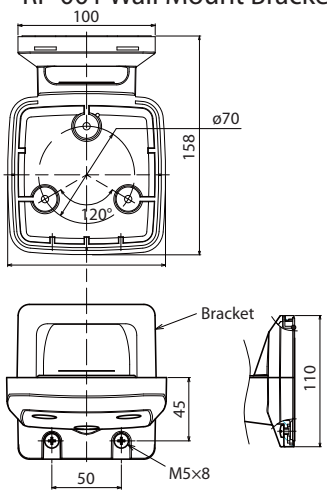

(Unit: mm)

Ceiling Mount Bracket

RF-002 Ceiling Mount Bracket

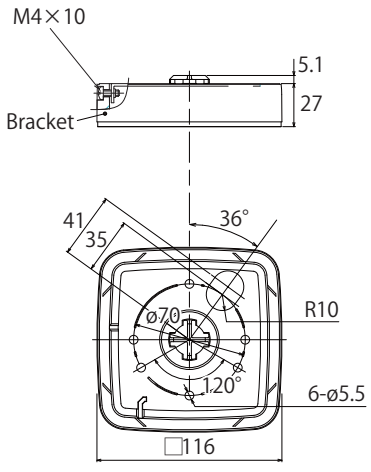

(Unit: mm)

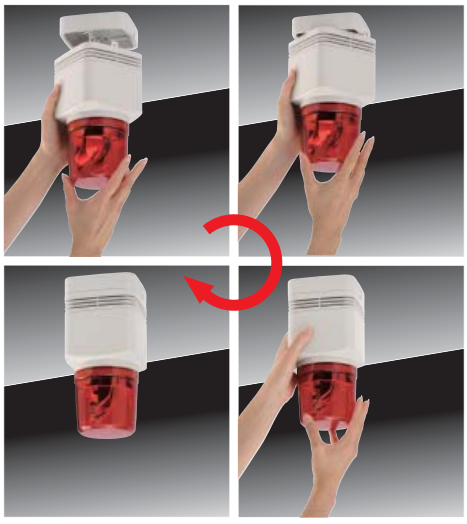

Melody Charts

Type A			(Japan Only)
Beep (slow intermittent)	Stutter (rapid intermittent)	Bell (clear high-pitch)	Yelp (rapid siren)
Rapid Hi-Lo	Melody Chime	Synthesized Piano	Synthesized Bell
Stutter + Bell	Synthesized Melody Chime	Chime	Call Sign
Fur Elise	Maiden's Prayer	Bach Minuet in Gmaj	Annie Laurie
London Bridge is falling down	Hol-di-ri-Dia	Mary had a little Lamb	Camptown Races
Cuckoo Song	Village Blacksmith	On the Bridge of Avignon	Daydream Believer
Amaryllis	Mozart Symphony No. 40	Quiet Lakeside	Ich bin ein Musikante
Spanish Romance	Katyusha	Grandfather's Clock	Ave Maria

Type D			(Japan Only)
Beep (slow intermittent)	Stutter (rapid intermittent)	Bell (clear high-pitch)	Yelp (rapid siren)
Rapid Hi-Lo	Melody Chime	Synthesized Piano	Synthesized Bell
Runner	Mamotte Agetai	Chime	Call Sign
Iribiao Kikinagara	September	Doyoubino Koibito	Akino Kehai
Saafu Tengoku Sukii Tengoku	Iro White-blend	Happy Birthday	Hi Ho
I've been working on the Railroad	The Bear Song	Toys Go "Cha-cha-cha"	Konnako Irukana
Schubert's Lullaby	Rudolph the red-nosed Reindeer	She Wore a Yellow Ribbon	My Darling, Clementine
Yellow Rose of Texas	Yankee Doodle	When the Saints Go Marching In	Londonderry Air

Type C			(Japan Only)
Beep (slow intermittent)	Stutter (rapid intermittent)	Bell (clear high-pitch)	Yelp (rapid siren)
Rapid Hi-Lo	Melody Chime	Synthesized Piano	Synthesized Bell
Stutter + Bell	Synthesized Melody Chime	Chime	Call Sign
Can't take my eyes off of you	Top of the World	The Entertainer	Amazing Grace
Amairono Kamino Otome	Les Champs-Elysees	Canon	Rara Sunshine
Uchuusenkan Yamamoto	Oshiete	Makenaide	Gonna Fly Now (Theme from "Rocky")
I don't Wanna Miss a Thing	Yozorano Mukou	Aiwa Katsu	Haruyo Koi
Gattsudaze	Odoru Ponpokorin	Imasugu Kisu Mi	Truth

Type E			(Worldwide)
Beep (slow intermittent)	Stutter + Bell	Inverted Reveille	Annie Laurie
Stutter (rapid intermittent)	Melody Chime	Galactic Motor	London Bridge is falling down
Bell (clear high-pitch)	Chime	Ringing Phone	Mary had a little Lamb
Yelp (rapid siren)	Call Sign	Two Tone	Camptown Races
Rapid Hi-Lo	Train Ride	Alarm Clock	Amaryllis
Melody Chime	Galloping Hi-Lo	Ringing Hi-Lo	Mozart Symphony No. 40
Synthesized Piano	Alien Chatter	Fur Elise	Ave Maria
Synthesized Bell	Falling Crystals	Bach Minuet in Gmaj	Grandfather's Clock

Type-F				(Japan Only)
Beep (slow intermittent)	Spring Melody	A Maiden's Prayer	Quiet Lakeside	BANZAI SUKIDE YOKATTA
Stutter (rapid intermittent)	Game Intermission	Bach Minuet in Gmaj	The Music Man	NAMONAKI UTA
Bell (clear high-pitch)	Jalopy Horn	Annie Laurie	Spanish Romance	SOUSEINO AKUERION
Yelp (rapid siren)	ET Doorbell	London Bridge is falling down	Katyusha	MAMBO NO 5
Rapid Hi-Lo	RR-crossing	Holdiridia	Ave Maria	The Parade of the Tin Soldiers
Melody Chime	Digital Train Whistle	Mary had a little Lamb	Grandfather's Clock	Turkey in the Straw
Synthesized Piano	Train Ride	The Camptown Races	RHYTHM AND POLICE	Aka tombo
Synthesized Bell	Starting Notice Chime1	Cuckoo Song	ZANKOKUNA TENSHINO TEEZE	Funiculi, Funicula
Stutter + Bell	Starting Notice Chime2	Village Blacksmith	MAJINGAA ZETTO	Furusato
Melody Chime	Starting Notice Chime3	On the Bridge of Avignon	HATARAKU KURUMA	Beautiful Dreamer
Chime	Ending Notice Chime1	Daydream Believer	NINGENTTE IINA	JOLLY HOLIDAY
Call Sign	Ending Notice Chime2	Amaryllis	ROBINSON	
Galactic Hovercraft	Fur Elise	Mozart Symphony No. 40	WORLD FOOTBALL ANTHEM	

Type-G				(Worldwide)
Beep (slow intermittent)	Galloping Hi-Lo	ET Doorbell	Mozart Symphony No. 40	Polka Tramblanka
Stutter (rapid intermittent)	Alien Chatter	RR-crossing	Ave Maria	O Vreneli
Bell (clear high-pitch)	Falling Crystals	Starting Notice Chime1	Grandfather's Clock	KAERUNO GASSHOU
Yelp (rapid siren)	Inverted Reveille	Starting Notice Chime2	The Parade of the Tin Soldiers	El Condor Pasa (If I Could)
Rapid Hi-Lo	Galactic Motor	Ending Notice Chime1	If You're Happy and You Know It	Hungarian Dance No.5
Melody Chime	Ringing Phone	Ending Notice Chime2	Flea Waltz	William Tell Overture
Synthesized Piano	Two Tone	Fur Elise	Turkey in the Straw	Pomp and Circumstance
Synthesized Bell	Alarm Clock	Bach Minuet in Gmaj	The Battle Hymn of the Republic	Comedians' Galop
Stutter + Bell	Ringing Hi-Lo	Annie Laurie	J'ai perdu le do de ma clarinette	Nedelka
Melody Chime	Galactic Hovercraft	London Bridge is falling down	Can-can	Moonlight Serenade
Chime	Spring Melody	Mary had a little Lamb	Radetzky March	WAREWA UMINO KO
Call Sign	Game Intermission	The Camptown Races	Funiculi, Funicula	
Train Ride	Jalopy Horn	Amaryllis	Csikos Post	

Use of Copyrighted Material

PATLITE Corporation has not applied for permission to use certain copyrighted music or songs recorded for Type-A, Type-C, Type-D and Type-F melody charts outside of Japan. Therefore, please contact the local copyright association for permission before using the product in case this product is used outside of Japan. Melody charts Type-E and Type-G are recommended for use outside of Japan as this playlist does not include copyrighted music or songs, and permission is not required.

Replacement Bulbs

Model	Bulb No.	Ratings	Part No.
RP35/BA15S	1	12V 35W	D01203501-F1
	2	24V 35W	D02403501-F1
RP35/BA15D	5	48V 35W	D04803502-F1
G18/BA15S	8	6V 3W	D00600303-F1
	9	12V 10W	D01201003A-F1
	10	24V 10W	D02401003A-F1
	11	48V 10W	D04801003-F1
	12	12V 5W	D01200503A-F1
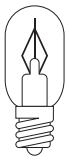 T20/E12	13	30V 10W	D03001006A-F1
	14	110V 10W	D11001006A-F1
	15	220V 10W	D22001006A-F1
	16	110V 15W	D11001506A-F1
	17	220V 15W	D22001506A-F1
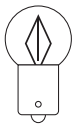 G14/BA9S	18	12V 6W	D01200604-F1
	19	24V 6W	D02400604-F1
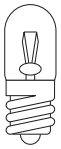 T10/E10	22	110V 3W	D11000307-F1
	27	12V 0.11A	D012/1107-F1
	28	24V 0.11A	D024/1107-F1
RP35/BA15D	36	120V 40W (Vibration Resistant)	D12004024-F1
	37	220V 30W	D22003024-F1

* Some bulbs may not be available due to part or product discontinuation without prior notice.

Model	Bulb No.	Ratings	Part No.
Vibration Resistant 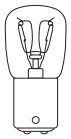 T20/BA15D	39	28V 11W	D02801111-F1
	40	110V 12W	D11001211-F1
	41	250V 11W	D25001111-F1
S25/BA15S	42	12V 23W	D01202305-F1
	43	24V 25W	D02402505-F1
Vibration Resistant 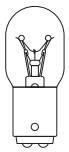 T20/BA15D	50	28V 20W	D02802011-F1
Vibration Resistant 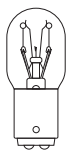 T20/BA15D	51	110V 20W	D11002011-F1
	53	250V 20W	D25002011-F1
G18/BA15S	54	12V 15W	D012001503-F1
	55	24V 20W	D02402003-F1
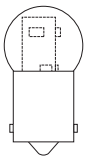	9	AC12V (50/60Hz) 1.7W (at 13.5VAC)	DEB-15SBA-CL

Look for this Mark:

Model DEB LED Lamp
Recommended Product
For more details on Model DEB
Refer to the "Replacement Bulb"
Section at the end of this Catalog

UL Certification Model
Model Comparison Table

The "UL Registration Model", which has acquired the UL certification, is printed on the model's name plate as is for our company product. The "UL Registration Model" does not show the tier number of the actual model. Therefore, please refer to the following model comparison table when choosing the model you need. When making an order, please verify the detailed information, such as product color, etc., which is listed on the page for each product. (As of June, 30, 2011)

Model	UL Registration Model
ME-102A	ME-_02A
ME-202A	ME-_02A
ME-302A	ME-_02A
ME-402A	ME-_02A
ME-502A	ME-_02A
MES-102A	MES-_02A
MES-202A	MES-_02A
MES-302A	MES-_02A
MES-402A	MES-_02A
MES-502A	MES-_02A
MP-102	MP-_02
MP-202	MP-_02
MP-302	MP-_02
MP-402	MP-_02
MP-502	MP-_02
MPS-102	MPS-_02
MPS-202	MPS-_02
MPS-302	MPS-_02
MPS-402	MPS-_02
MPS-502	MPS-_02
LCE-102A	LCE-_02A
LCE-202A	LCE-_02A
LCE-302A	LCE-_02A
LCE-402A	LCE-_02A
LCE-502A	LCE-_02A
LCE-1M2A	LCE-_M2A
LCE-2M2A	LCE-_M2A
LCE-3M2A	LCE-_M2A
LCE-4M2A	LCE-_M2A
LCE-5M2A	LCE-_M2A
LCE-102AW	LCE-_02AW
LCE-202AW	LCE-_02AW
LCE-302AW	LCE-_02AW
LCE-402AW	LCE-_02AW
LCE-502AW	LCE-_02AW
LCE-1M2AW	LCE-_M2AW
LCE-2M2AW	LCE-_M2AW
LCE-3M2AW	LCE-_M2AW
LCE-4M2AW	LCE-_M2AW
LCE-5M2AW	LCE-_M2AW
LCE-102AFB	LCE-_02AFB
LCE-202AFB	LCE-_02AFB
LCE-302AFB	LCE-_02AFB
LCE-402AFB	LCE-_02AFB
LCE-502AFB	LCE-_02AFB
LCE-1M2AFB	LCE-_M2AFB
LCE-2M2AFB	LCE-_M2AFB
LCE-3M2AFB	LCE-_M2AFB
LCE-4M2AFB	LCE-_M2AFB
LCE-5M2AFB	LCE-_M2AFB
LCE-102AFBK	LCE-_02AFBK
LCE-202AFBK	LCE-_02AFBK
LCE-302AFBK	LCE-_02AFBK
LCE-402AFBK	LCE-_02AFBK
LCE-502AFBK	LCE-_02AFBK
LCE-102AFBK	LCE-_M2AFBK
LCE-202AFBK	LCE-_M2AFBK
LCE-302AFBK	LCE-_M2AFBK
LCE-402AFBK	LCE-_M2AFBK
LCE-502AFBK	LCE-_M2AFBK

Model	UL Registration Model
LCE-1M2AFBW	LCE-_M2AFBW
LCE-2M2AFBW	LCE-_M2AFBW
LCE-3M2AFBW	LCE-_M2AFBW
LCE-4M2AFBW	LCE-_M2AFBW
LCE-5M2AFBW	LCE-_M2AFBW
LCS-102A	LCS-_02A
LCS-202A	LCS-_02A
LCS-302A	LCS-_02A
LCS-402A	LCS-_02A
LCS-502A	LCS-_02A
LCS-102AK	LCS-_02AK
LCS-202AK	LCS-_02AK
LCS-302AK	LCS-_02AK
LCS-402AK	LCS-_02AK
LCS-502AK	LCS-_02AK
LES-102A	LES-_02A
LES-202A	LES-_02A
LES-302A	LES-_02A
LES-402A	LES-_02A
LES-502A	LES-_02A
LES-102AW	LES-_02AW
LES-202AW	LES-_02AW
LES-302AW	LES-_02AW
LES-402AW	LES-_02AW
LES-502AW	LES-_02AW
LE-101P	LE-_01P
LE-201P	LE-_01P
LE-301P	LE-_01P
LE-401P	LE-_01P
LE-501P	LE-_01P
LE-102P	LE-_02P
LE-202P	LE-_02P
LE-302P	LE-_02P
LE-402P	LE-_02P
LE-502P	LE-_02P
LE-101W	LE-_01W
LE-201W	LE-_01W
LE-301W	LE-_01W
LE-401W	LE-_01W
LE-501W	LE-_01W
LE-102W	LE-_02W
LE-202W	LE-_02W
LE-302W	LE-_02W
LE-402W	LE-_02W
LE-502W	LE-_02W
LE-101FBP	LE-_01FBP
LE-201FBP	LE-_01FBP
LE-301FBP	LE-_01FBP
LE-401FBP	LE-_01FBP
LE-501FBP	LE-_01FBP
LE-102FBP	LE-_02FBP
LE-202FBP	LE-_02FBP
LE-302FBP	LE-_02FBP
LE-402FBP	LE-_02FBP
LE-502FBP	LE-_02FBP
LE-101FBW	LE-_01FBW
LE-201FBW	LE-_01FBW
LE-301FBW	LE-_01FBW
LE-401FBW	LE-_01FBW
LE-501FBW	LE-_01FBW

Model	UL Registration Model
LE-102FBW	LE-_02FBW
LE-202FBW	LE-_02FBW
LE-302FBW	LE-_02FBW
LE-402FBW	LE-_02FBW
LE-502FBW	LE-_02FBW
LFH-12	LFH-12
LFH-24	LFH-24
LFH-48	LFH-48
LFH-M2	LFH-M2
LME-102	LME-_02
LME-202	LME-_02
LME-302	LME-_02
LME-402	LME-_02
LME-502	LME-_02
LME-102L	LME-_02L
LME-202L	LME-_02L
LME-302L	LME-_02L
LME-402L	LME-_02L
LME-502L	LME-_02L
LME-102W	LME-_02W
LME-202W	LME-_02W
LME-302W	LME-_02W
LME-402W	LME-_02W
LME-502W	LME-_02W
LME-102FB	LME-_02FB
LME-202FB	LME-_02FB
LME-302FB	LME-_02FB
LME-402FB	LME-_02FB
LME-502FB	LME-_02FB
LME-102FBL	LME-_02FBL
LME-202FBL	LME-_02FBL
LME-302FBL	LME-_02FBL
LME-402FBL	LME-_02FBL
LME-502FBL	LME-_02FBL
LME-102FBK	LME-_02FBK
LME-202FBK	LME-_02FBK
LME-302FBK	LME-_02FBK
LME-402FBK	LME-_02FBK
LME-502FBK	LME-_02FBK
LME-102FBW	LME-_02FBW
LME-202FBW	LME-_02FBW
LME-302FBW	LME-_02FBW
LME-402FBW	LME-_02FBW
LME-502FBW	LME-_02FBW
LME-112	LME-_12
LME-212	LME-_12
LME-312	LME-_12
LME-412	LME-_12
LME-512	LME-_12
LME-112L	LME-_12L
LME-212L	LME-_12L
LME-312L	LME-_12L
LME-412L	LME-_12L
LME-512L	LME-_12L
LME-112W	LME-_12W
LME-212W	LME-_12W
LME-312W	LME-_12W
LME-412W	LME-_12W
LME-512W	LME-_12W
—	—

Model	UL Registration Model
LME-112FB	LME-_12FB
LME-212FB	LME-_12FB
LME-312FB	LME-_12FB
LME-412FB	LME-_12FB
LME-512FB	LME-_12FB
LME-112FBL	LME-_12FBL
LME-212FBL	LME-_12FBL
LME-312FBL	LME-_12FBL
LME-412FBL	LME-_12FBL
LME-512FBL	LME-_12FBL
LME-112FBK	LME-_12FBK
LME-212FBK	LME-_12FBK
LME-312FBK	LME-_12FBK
LME-412FBK	LME-_12FBK
LME-512FBK	LME-_12FBK
LME-112FBW	LME-_12FBW
LME-212FBW	LME-_12FBW
LME-312FBW	LME-_12FBW
LME-412FBW	LME-_12FBW
LME-512FBW	LME-_12FBW
LME-123	LME-_23
LME-223	LME-_23
LME-323	LME-_23
LME-423	LME-_23
LME-523	LME-_23
LME-123L	LME-_23L
LME-223L	LME-_23L
LME-323L	LME-_23L
LME-423L	LME-_23L
LME-523L	LME-_23L
LME-123W	LME-_23W
LME-223W	LME-_23W
LME-323W	LME-_23W
LME-423W	LME-_23W
LME-523W	LME-_23W
LME-123FB	LME-_23FB
LME-223FB	LME-_23FB
LME-323FB	LME-_23FB
LME-423FB	LME-_23FB
LME-523FB	LME-_23FB
LME-123FBL	LME-_23FBL
LME-223FBL	LME-_23FBL
LME-323FBL	LME-_23FBL
LME-423FBL	LME-_23FBL
LME-523FBL	LME-_23FBL
LME-123FBK	LME-_23FBK
LME-223FBK	LME-_23FBK
LME-323FBK	LME-_23FBK
LME-423FBK	LME-_23FBK
LME-523FBK	LME-_23FBK
LME-123FBW	LME-_23FBW
LME-223FBW	LME-_23FBW
LME-323FBW	LME-_23FBW
LME-423FBW	LME-_23FBW
LME-523FBW	LME-_23FBW
LME-102U	LME-_02U
LME-202U	LME-_02U
LME-302U	LME-_02U
LME-402U	LME-_02U
LME-502U	LME-_02U
LME-102UL	LME-_02UL
LME-202UL	LME-_02UL
LME-302UL	LME-_02UL
LME-402UL	LME-_02UL
LME-502UL	LME-_02UL

Model	UL Registration Model
LME-102UW	LME-_02UW
LME-202UW	LME-_02UW
LME-302UW	LME-_02UW
LME-402UW	LME-_02UW
LME-502UW	LME-_02UW
LME-102UFB	LME-_02UFB
LME-202UFB	LME-_02UFB
LME-302UFB	LME-_02UFB
LME-402UFB	LME-_02UFB
LME-502UFB	LME-_02UFB
LME-102UFBL	LME-_02UFBL
LME-202UFBL	LME-_02UFBL
LME-302UFBL	LME-_02UFBL
LME-402UFBL	LME-_02UFBL
LME-502UFBL	LME-_02UFBL
LME-102UFBK	LME-_02UFBK
LME-202UFBK	LME-_02UFBK
LME-302UFBK	LME-_02UFBK
LME-402UFBK	LME-_02UFBK
LME-502UFBK	LME-_02UFBK
LME-102UFBW	LME-_02UFBW
LME-202UFBW	LME-_02UFBW
LME-302UFBW	LME-_02UFBW
LME-402UFBW	LME-_02UFBW
LME-502UFBW	LME-_02UFBW
LME-112U	LME-_12U
LME-212U	LME-_12U
LME-312U	LME-_12U
LME-412U	LME-_12U
LME-512U	LME-_12U
LME-112UL	LME-_12UL
LME-212UL	LME-_12UL
LME-312UL	LME-_12UL
LME-412UL	LME-_12UL
LME-512UL	LME-_12UL
LME-112UW	LME-_12UW
LME-212UW	LME-_12UW
LME-312UW	LME-_12UW
LME-412UW	LME-_12UW
LME-512UW	LME-_12UW
LME-112U	LME-_12U
LME-212U	LME-_12U
LME-312U	LME-_12U
LME-412U	LME-_12U
LME-512U	LME-_12U
LME-112UL	LME-_12UL
LME-212UL	LME-_12UL
LME-312UL	LME-_12UL
LME-412UL	LME-_12UL
LME-512UL	LME-_12UL
LME-112UW	LME-_12UW
LME-212UW	LME-_12UW
LME-312UW	LME-_12UW
LME-412UW	LME-_12UW
LME-512UW	LME-_12UW
LME-112UFB	LME-_12UFB
LME-212UFB	LME-_12UFB
LME-312UFB	LME-_12UFB
LME-412UFB	LME-_12UFB
LME-512UFB	LME-_12UFB
LME-112UFBL	LME-_12UFBL
LME-212UFBL	LME-_12UFBL
LME-312UFBL	LME-_12UFBL
LME-412UFBL	LME-_12UFBL
LME-512UFBL	LME-_12UFBL

Model	UL Registration Model
LME-112UFBK	LME-_12UFBK
LME-212UFBK	LME-_12UFBK
LME-312UFBK	LME-_12UFBK
LME-412UFBK	LME-_12UFBK
LME-512UFBK	LME-_12UFBK
LME-112UFBW	LME-_12UFBW
LME-212UFBW	LME-_12UFBW
LME-312UFBW	LME-_12UFBW
LME-412UFBW	LME-_12UFBW
LME-512UFBW	LME-_12UFBW
LME-123U	LME-_23
LME-223U	LME-_23
LME-323U	LME-_23
LME-423U	LME-_23
LME-523U	LME-_23
LME-123UL	LME-_23UL
LME-223UL	LME-_23UL
LME-323UL	LME-_23UL
LME-423UL	LME-_23UL
LME-523UL	LME-_23UL
LME-123UW	LME-_23UW
LME-223UW	LME-_23UW
LME-323UW	LME-_23UW
LME-423UW	LME-_23UW
LME-523UW	LME-_23UW
LME-123UFB	LME-_23UFB
LME-223UFB	LME-_23UFB
LME-323UFB	LME-_23UFB
LME-423UFB	LME-_23UFB
LME-523UFB	LME-_23UFB
LME-123UFBL	LME-_23UFBL
LME-223UFBL	LME-_23UFBL
LME-323UFBL	LME-_23UFBL
LME-423UFBL	LME-_23UFBL
LME-523UFBL	LME-_23UFBL
LME-123UFBK	LME-_23UFBK
LME-223UFBK	LME-_23UFBK
LME-323UFBK	LME-_23UFBK
LME-423UFBK	LME-_23UFBK
LME-523UFBK	LME-_23UFBK
LME-123UFBW	LME-_23UFBW
LME-223UFBW	LME-_23UFBW
LME-323UFBW	LME-_23UFBW
LME-423UFBW	LME-_23UFBW
LME-523UFBW	LME-_23UFBW
LME-102N	LME-_02N
LME-202N	LME-_02N
LME-302N	LME-_02N
LME-402N	LME-_02N
LME-502N	LME-_02N
LME-102NL	LME-_02NL
LME-202NL	LME-_02NL
LME-302NL	LME-_02NL
LME-402NL	LME-_02NL
LME-502NL	LME-_02NL
LME-102NW	LME-_02NW
LME-202NW	LME-_02NW
LME-302NW	LME-_02NW
LME-402NW	LME-_02NW
LME-502NW	LME-_02NW
LME-102NFB	LME-_02NFB
LME-202NFB	LME-_02NFB
LME-302NFB	LME-_02NFB
LME-402NFB	LME-_02NFB
LME-502NFB	LME-_02NFB

UL Certification Model
Model Comparison Table

The "UL Registration Model", which has acquired the UL certification, is printed on the model's name plate as is for our company product. The "UL Registration Model" does not show the tier number of the actual model. Therefore, please refer to the following model comparison table when choosing the model you need. When making an order, please verify the detailed information, such as product color, etc., which is listed on the page for each product. (As of June, 30, 2011)

Model	UL Registration Model
LME-102NFBL	LME-_02NFBL
LME-202NFBL	LME-_02NFBL
LME-302NFBL	LME-_02NFBL
LME-402NFBL	LME-_02NFBL
LME-502NFBL	LME-_02NFBL
LME-102NFBK	LME-_02NFBK
LME-202NFBK	LME-_02NFBK
LME-302NFBK	LME-_02NFBK
LME-402NFBK	LME-_02NFBK
LME-502NFBK	LME-_02NFBK
LME-102NFBW	LME-_02NFBW
LME-202NFBW	LME-_02NFBW
LME-302NFBW	LME-_02NFBW
LME-402NFBW	LME-_02NFBW
LME-502NFBW	LME-_02NFBW
LME-112N	LME-_12N
LME-212N	LME-_12N
LME-312N	LME-_12N
LME-412N	LME-_12N
LME-512N	LME-_12N
LME-112NL	LME-_12NL
LME-212NL	LME-_12NL
LME-312NL	LME-_12NL
LME-412NL	LME-_12NL
LME-512NL	LME-_12NL
LME-112NW	LME-_12NW
LME-212NW	LME-_12NW
LME-312NW	LME-_12NW
LME-412NW	LME-_12NW
LME-512NW	LME-_12NW
LME-112NFB	LME-_12NFB
LME-212NFB	LME-_12NFB
LME-312NFB	LME-_12NFB
LME-412NFB	LME-_12NFB
LME-512NFB	LME-_12NFB
LME-112NFBL	LME-_12NFBL
LME-212NFBL	LME-_12NFBL
LME-312NFBL	LME-_12NFBL
LME-412NFBL	LME-_12NFBL
LME-512NFBL	LME-_12NFBL
LME-112NFBK	LME-_12NFBK
LME-212NFBK	LME-_12NFBK
LME-312NFBK	LME-_12NFBK
LME-412NFBK	LME-_12NFBK
LME-512NFBK	LME-_12NFBK
LME-112NFBW	LME-_12NFBW
LME-212NFBW	LME-_12NFBW
LME-312NFBW	LME-_12NFBW
LME-412NFBW	LME-_12NFBW
LME-512NFBW	LME-_12NFBW
LME-123N	LME-_23N
LME-223N	LME-_23N
LME-323N	LME-_23N
LME-423N	LME-_23N
LME-523N	LME-_23N
LME-123NL	LME-_23NL
LME-223NL	LME-_23NL
LME-323NL	LME-_23NL
LME-423NL	LME-_23NL
LME-523NL	LME-_23NL

Model	UL Registration Model
LME-123NW	LME-_23NW
LME-223NW	LME-_23NW
LME-323NW	LME-_23NW
LME-423NW	LME-_23NW
LME-523NW	LME-_23NW
LME-123NFB	LME-_23NFB
LME-223NFB	LME-_23NFB
LME-323NFB	LME-_23NFB
LME-423NFB	LME-_23NFB
LME-523NFB	LME-_23NFB
LME-123NFBL	LME-_23NFBL
LME-223NFBL	LME-_23NFBL
LME-323NFBL	LME-_23NFBL
LME-423NFBL	LME-_23NFBL
LME-523NFBL	LME-_23NFBL
LME-123NFBK	LME-_23NFBK
LME-223NFBK	LME-_23NFBK
LME-323NFBK	LME-_23NFBK
LME-423NFBK	LME-_23NFBK
LME-523NFBK	LME-_23NFBK
LME-123NFBW	LME-_23NFBW
LME-223NFBW	LME-_23NFBW
LME-323NFBW	LME-_23NFBW
LME-423NFBW	LME-_23NFBW
LME-523NFBW	LME-_23NFBW
LME-102-S ☐	LME-_02-S
LME-102-Q ☐	LME-_02-Q
LME-102W-S ☐	LME-_02W-S
LME-102W-Q ☐	LME-_02W-Q
LME-102FB-S ☐	LME-_02FB-S
LME-102FB-Q ☐	LME-_02FB-Q
LME-102FBW-S ☐	LME-_02FBW-S
LME-102FBW-Q ☐	LME-_02FBW-Q
LME-112-S ☐	LME-_12-S
LME-112-Q ☐	LME-_12-Q
LME-112W-S ☐	LME-_12W-S
LME-112W-Q ☐	LME-_12W-Q
LME-112FB-S ☐	LME-_12FB-S
LME-112FB-Q ☐	LME-_12FB-Q
LME-102FBW-S ☐	LME-_02FBW-S
LME-112FBW-Q ☐	LME-_12FBW-Q
LME-123-S ☐	LME-_23-S
LME-123-Q ☐	LME-_23-Q
LME-123W-S ☐	LME-_23W-S
LME-123W-Q ☐	LME-_23W-Q
LME-123FB-S ☐	LME-_23FB-S
LME-123FB-Q ☐	LME-_23FB-Q
LME-123FBW-S ☐	LME-_23FBW-S
LME-123FBW-Q ☐	LME-_23FBW-Q
LMS-102	LMS-_02
LMS-202	LMS-_02
LMS-302	LMS-_02
LMS-402	LMS-_02
LMS-502	LMS-_02
LMS-102L	LMS-_02L
LMS-202L	LMS-_02L
LMS-302L	LMS-_02L
LMS-402L	LMS-_02L
LMS-502L	LMS-_02L
—	—

Model	UL Registration Model
LMS-102K	LMS-_02K
LMS-202K	LMS-_02K
LMS-302K	LMS-_02K
LMS-402K	LMS-_02K
LMS-502K	LMS-_02K
LHE-102A	LHE-_02A
LHE-202A	LHE-_02A
LHE-302A	LHE-_02A
LHE-402A	LHE-_02A
LHE-502A	LHE-_02A
LHE-102AFB	LHE-_02AFB
LHE-202AFB	LHE-_02AFB
LHE-302AFB	LHE-_02AFB
LHE-402AFB	LHE-_02AFB
LHE-502AFB	LHE-_02AFB
LHE-112A	LHE-_12A
LHE-212A	LHE-_12A
LHE-312A	LHE-_12A
LHE-412A	LHE-_12A
LHE-512A	LHE-_12A
LHE-112AFB	LHE-_12AFB
LHE-212AFB	LHE-_12AFB
LHE-312AFB	LHE-_12AFB
LHE-412AFB	LHE-_12AFB
LHE-512AFB	LHE-_12AFB
LHE-123A	LHE-_23A
LHE-223A	LHE-_23A
LHE-323A	LHE-_23A
LHE-423A	LHE-_23A
LHE-523A	LHE-_23A
LHE-123AFB	LHE-_23AFB
LHE-223AFB	LHE-_23AFB
LHE-323AFB	LHE-_23AFB
LHE-423AFB	LHE-_23AFB
LHE-523AFB	LHE-_23AFB
WEP-302	WEP-_02
WEP-402	WEP-_02
WEP-502	WEP-_02
WE-302	WE-_02
WE-402	WE-_02
WE-502	WE-_02
WEP-302FB	WEP-_02FB
WEP-402FB	WEP-_02FB
WEP-502FB	WEP-_02FB
WE-302FB	WE-_02FB
WE-402FB	WE-_02FB
WE-502FB	WE-_02FB
WME-202A	WME-_02A
WME-302A	WME-_02A
WME-402A	WME-_02A
WME-502A	WME-_02A
WME-2M2A	WME-_M2A
WME-3M2A	WME-_M2A
WME-4M2A	WME-_M2A
WME-5M2A	WME-_M2A
WME-202AFB	WME-_02AFB
WME-302AFB	WME-_02AFB
WME-402AFB	WME-_02AFB
WME-502AFB	WME-_02AFB
—	—

Model	UL Registration Model
WME-2M2AFB	WME-_M2AFB
WME-3M2AFB	WME-_M2AFB
WME-4M2AFB	WME-_M2AFB
WME-5M2AFB	WME-_M2AFB
LKEH-102FAUL	LKEH-_02FAUL
LKEH-202FAUL	LKEH-_02FAUL
LKEH-302FAUL	LKEH-_02FAUL
LKEH-402FAUL	LKEH-_02FAUL
LKEH-102FCUL	LKEH-_02FCUL
LKEH-202FCUL	LKEH-_02FCUL
LKEH-302FCUL	LKEH-_02FCUL
LKEH-402FCUL	LKEH-_02FCUL
LKEH-102FDUL	LKEH-_02FDUL
LKEH-202FDUL	LKEH-_02FDUL
LKEH-302FDUL	LKEH-_02FDUL
LKEH-402FDUL	LKEH-_02FDUL
LKEH-102FEUL	LKEH-_02FEUL
LKEH-202FEUL	LKEH-_02FEUL
LKEH-302FEUL	LKEH-_02FEUL
LKEH-402FEUL	LKEH-_02FEUL
LKEH-102FVUL	LKEH-_02FVUL
LKEH-202FVUL	LKEH-_02FVUL
LKEH-302FVUL	LKEH-_02FVUL
LKEH-402FVUL	LKEH-_02FVUL

Model	UL Registration Model

Model	UL Registration Model

Patlite Sanda Factory & Tech Center　　Sanda Factory

Patlite (U.S.A.) Corporation　　Patlite Europe GmbH

Patlite Singapore　　Patlite China　　Patlite Korea　　Taiwan Rep. Office

http://www.patlite.com　e-mail:overseas@patlite.co.jp

PATLITE Corporation

4-11-14 Itachibori, Nishi-ku, Osaka, Japan 550-0012
International Sales and Marketing Department
TEL: +81-6-7688-5400　FAX: +81-6-7688-5401

PATLITE (U.S.A.) Corporation
20130 S. Western Ave. Torrance, CA90501, U.S.A.　TEL: +1-310-328-3222　FAX: +1-310-328-2676

PATLITE (SINGAPORE) PTE LTD
No.2 Leng Kee Road, #05-01 Thye Hong Centre, Singapore 159086　TEL: +65-6226-1111　FAX: +65-6324-1411

PATLITE Europe GmbH
Am Soeldnermoos 8, D-85399 Hallbergmoos, Germany　TEL.+49 -811 9981 9770-0　FAX.+49-811 9981 9770-9

PATLITE KOREA CO., LTD.
A-2603, Daesung D-POLIS, 543-1 Gasan-dong, Geumcheon-gu, Seoul, 153-719　TEL.+82-2-523-6636　FAX.+82-2-861-9919

PATLITE Japan Representative Office in Taiwan
7F. No. 91, Huayin St, Datong District Taipei, Taiwan R.O.C　TEL.+886-2-2555-1611　FAX.+886-2-2555-1621

P T. PATLITE INDONESIA (FACTORY)
LOT 321 Batamindo Industrial Park, Jalan Beringin Mukakuning, Batam 29433 Indonesia　TEL.+62-770-61-1123　FAX.+62-770-61-2444

ISO14001/ISO9001Certified

LLOYD'S REGISTER QUALITY ASSURANCE ISO 14001
UKAS ENVIRONMENTAL MANAGEMENT 001

Headquarters/Sanda Plant/Techno Center

TÜV CERT
DIN EN ISO 9001:2000
Cert. No. 01 100 009197

PT. PATLITE INDONESIA

PATLITE ECO PROJECT

For the benefit of mankind and the earth, PATLITE is committed to developing environmentally friendly products.

⚠ CAUTION

To ensure correct use of these products, read the Instruction Manual prior to use.
Failure to follow all safeguards can result in fire, electric shock, or other accidents.
Specifications are subject to change without notice.

C0120C | 1310C(C)/C(JN)A

PATLITE
New Frontiers in Safety, Security and Comfort.
www.patlite.com