指定外公差 General tolerance	角度公差 Angular tolerance ±[°]					寸法公差 Dimensional tolerance ±[mm]						符号 Sym.	年月日 Date	訂正履歴 Revisions	記印 Sgn.	検印 Chk.
長辺 Length of side	~10	10~50	50~100	100~			~6	6~30	30~120	120~300	300~1000	△-				
精 f	1	0.5	0.3	0.1		精 f	0.05	0.1	0.2	0.4	0.6	△-				
中 m						中 m	0.1	0.3	0.5	0.7	1	△-				
粗 v	3	1.5	1	0.5		粗 c	0.3	0.5	1	1.2	2	△-				

質量 Mass g

[Dimensions]

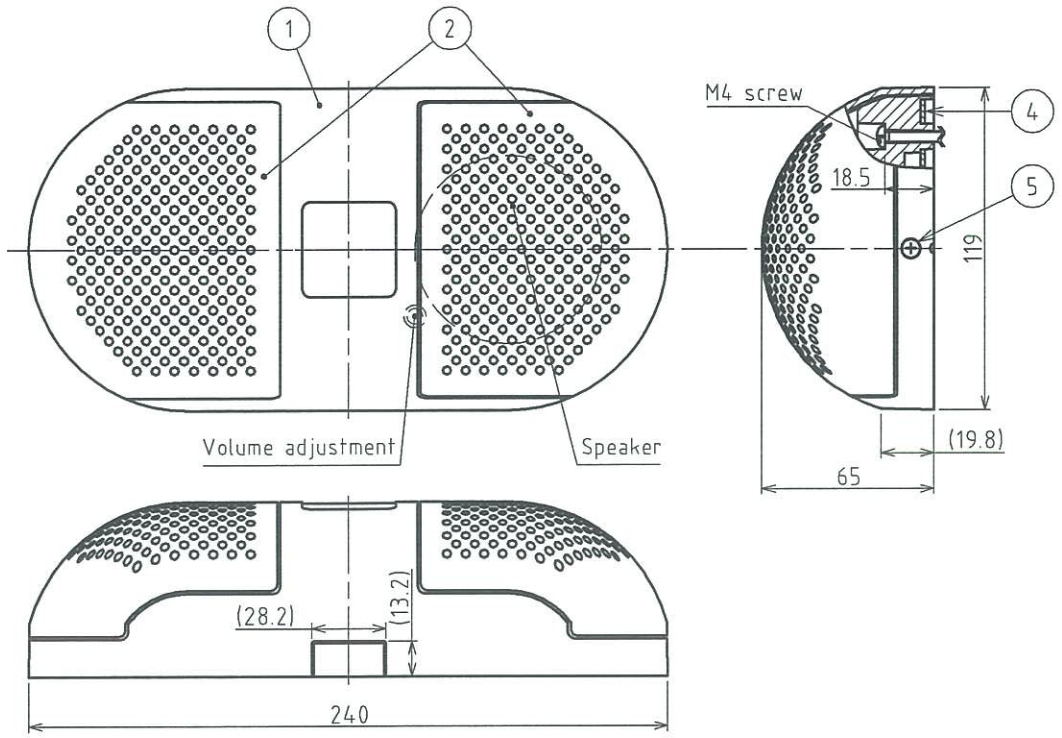

[Wiring procedure]

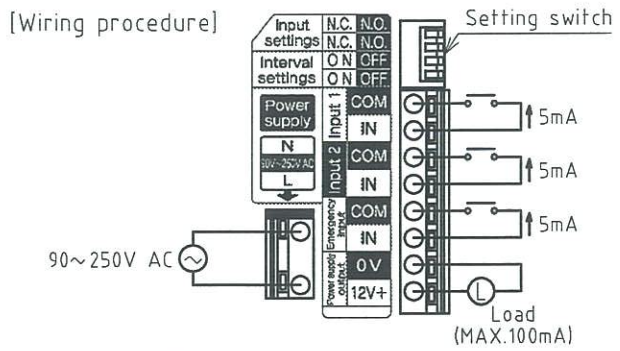

· Wire size
Single wire:0.14mm² ~ 1.25mm² (AWG26~16)
Twisted wire:0.3mm² ~ 1.25mm² (AWG22~16)

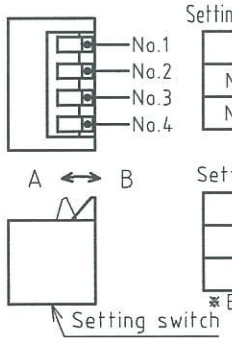

Setting of seconds the reproduction interval

	No.4 B	No.4 A
No.3 B	0sec	10sec
No.3 A	5sec	15sec

Setting of N.O./N.C. the Input1、2

	A	B
No.1	N.C.	N.O.
No.2		

※ Emergancy input becomes N.O.

Settings of Input/Interval

[Model]

WG-03M2T FV002

Rated voltage M2:90~250V AC
Memory capacity T:2Mbit
TOKUPO No.

PATLITE CORPORATION PATLITE® MAR. 07. 2008 MANUFACTURE TECHNICAL GROUP

[Specificarions]

Model		#WG-03M2T FV002
Rated voltage		90~250V AC
Power consumption		6W MAX.
Message volume		Max. 90dB at 1meter (Varieble)
Message file type		MPEG1-Audio Layer Ⅲ (MP3)
Bit rate		64kbit/s
Message memory capacity		2Mbit (Will reply up to 32 sec, when recorded at 64kbit/s.))
Combination message		1 channel is maximum of 16 phrese(It conforms to the FV type of our product)
Data storage medium		Optional Multimedia Card
Message rewrite time		Max. 16sec, for card with no data
Input1	Message	User specified
	N.C./N.O.	User selectable by intarnal seitch(Factory dafalt = N.C.)
	Input circuit	Sinking type : No load : 12V DC : Full load : 5mA
	Open collector	NPN
	Message interval	User selectable(See Interval Settings under Operrations)
Input2	Message	User specified
	N.C./N.O.	User selectable by intarnal seitch(Factory dafalt = N.O.)
	Input circuit	Sinking type : No load : 12V DC : Full load : 5mA
	Open collector	NPN
	Message interval	User selectable(See Interval Settings under Operrations)
Emergancy input	Message	User specified
	N.C./N.O.	Not adjustable, fixed at N.O.
	Input circuit	Sinking type : No load : 12V DC : Full load : 5mA
	Open collector	NPN
	Message interval	Not adjustable, fixed at 1sec, between masseges
Detection mode		Post-detection priority(other inputs invalid if emerg.input is on)
Priority fevel		Emergency Input > Input2 > Input1
Extemel power supply output		Voltage : 12V DC±10%, Max.Load Current : 100mA
Repeat Mseeage Interval		0, 5, 10, 15sec, (Selection is common to both Inputs 1&2)
Operating temperature range		-10~+60℃
Relavibe humidity		85%RH or less (No codensation)
Environmental		Indoor only, No splashing liqued
Mounting		It is fixed to the board with two-point screw
Vibration		19.6m/s²
Mass		600g

[Mounting drawing(Size1:3)]

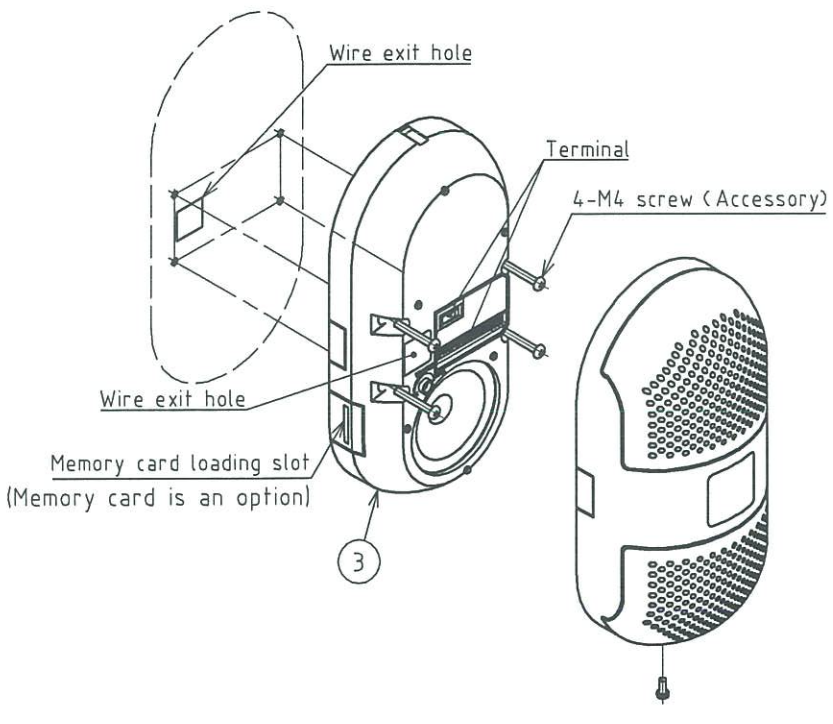

[Mounting size drawing]

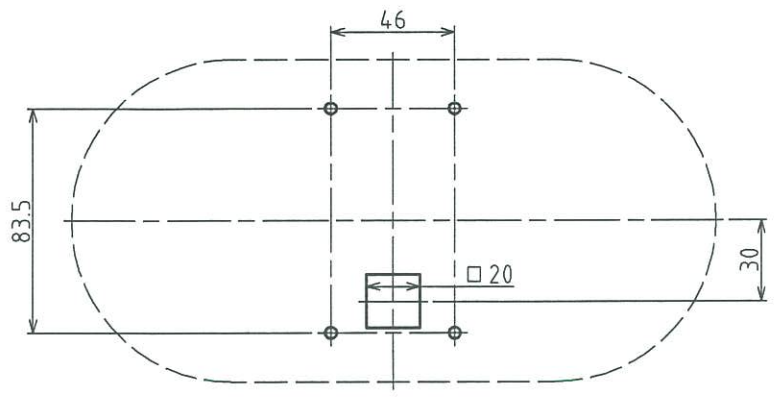

(JIS C8340 Conform to switch box of two hole)

番号 No.	部品名 Part Name	品目コード Part No.	数量 Qty.	材料 & 寸法 & 処理 Material & Size & Finish	記事 Remarks
-	Accessory seal		1	PET	
5	Screw with spring washer		1	M4×10 SUS	
4	Bottom plate		1	FR-1	
3	Front case		1	PC	Clear
2	Speaker cover		2	PC	Light gray
1	Front cover		1	PC	Light gray

設計 Dgn.by	製図 Drn.by	検図 Chk.by	承認 App.by	図名 Name	機種名 Model	特注No. S.P.No.
T.Okamoto 13.Oct.'05	T.Fujiwara 6.Mar.'08	M.Yoshida 7.Mar.'08	W.Nakao 7.Mar.'08	Specifications	#WG-03M2T	FV002
					品目コード Part No. -	
三角法 3rd Angle P.	単位 Unit mm	尺度 Scale 1:2	株式会社 パトライト PATLITE Corporation		図番 Drawing No. WG-FV002B-A18A	

発行先	部数
製造	
製造技術	
購買・生管	
部品管理	
品質管理	
海外生産	
配送	
技術	
ソフト	
営業拠点	
営業企画	
CS室	
合計	