Noark®

Data Sheet

Thermal Overload Relays

Ex9RD Series

Ex9RD25

Ex9RD93

www.NoarkUSA.com

NOARK

Thermal Overload Relays
NOARK Ex9RD Series

Thermal overload relays are economic electromechanical protection devices for the main circuit. They are used mainly to protect motors against overload and phase failures. Starter combinations are setup together with contactors.

- Overload protection trip Class 10A
- Phase loss sensitivity
- Temperature compensation from -25 to +55 °C
- Adjustable current setting for overload protection
- Automatic or manual reset selectable
- Trip-free mechanism
- Status indication
- STOP and TEST function
- Direct mount to contactors or 35 mmDIN rail mounting base option

The overload relays have a setting scale in Amperes, which allows the direct adjusting of the relay without any additional calculation. In compliance with international and national standards, the setting current is the rated current of the motor and not the tripping current (no tripping at 1.05 x I, tripping at 1.2 x I; I = setting current). The relays are constructed to protect themselves in the event of an overload. The overload relay has to be protected against short-circuit. The appropriate short-circuit protection devices are shown in the table.

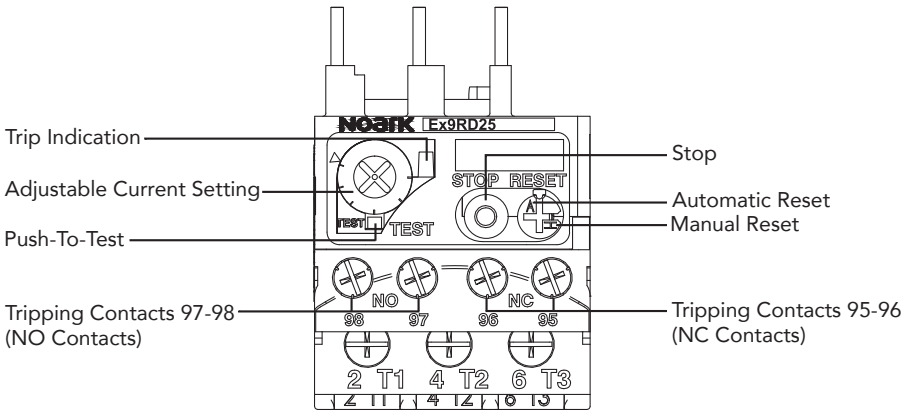

Certifications

- IEC/EN 60947-4-1
- CE Approved
- UL 508 Listed
- CSA 22.2 No. 14 Certified
- RoHS Compliant

Product Selection Guide

Ex9RD	25	A	13
NOARK Ex9RD Series	Frame Amperage	Trip Class*	Setting Amperage

Frame Amperage

11.5:	11.5A
25:	25A
36:	36A
93:	93A
200:	200A
630:	630A

Trip Class*

A: Class 10A

Setting Amperage

0.16:	0.1~0.16A	36:	28~36A
0.25:	0.16~0.25A	40:	30~40A
0.4:	0.25~0.4A	50:	37~50A
0.63:	0.4~0.63A	65:	48~65A
1:	0.63~1A	70:	55~70A
1.6:	1~1.6A	80:	63~80A
2:	1.25~2A	93:	80~93A
2.5:	1.6~2.5A	125:	80~125A
4:	2.5~4A	160:	100~160A
6:	4~6A	200:	125~200A
8:	5.5~8A	250:	160~250A
10:	7~10A	315:	200~315A
13:	9~13A	400:	250~400A
18:	12~18A	500:	315~500A
25:	17~25A	630:	400~630A
32:	23~32A		

Note: Consult NOARK for information on Tripping Class 10 and 20

2017 NOARK Electric • All Rights Reserved

Thermal Overload Relays

Specifications IEC/EN

Data at 40 and at rated values

		Main Circuit	Auxiliary Circuit
Rated Operational Voltage U_e		690 Vac	600 Vac
Setting Range - Thermal Overload Protection		Lower value to upper value of setting range (See page 5)	-
Trip Class		Option Class 10A	-
Rated Frequency		50/60 Hz	50/60 Hz
Number of Poles		3	1NO+1NC
Conventional Free Air Thermal Current I_{th}		-	4A
Rated Operational Current AC-3 I_e		See upper value of setting range (See page 5)	-
Rated Operational Current I_e (Accessories to IEC 60947-5-1 for Utilization Category)	15 @ 220/240 Vac	-	2.73A
	15 @ 380 Vac	-	1.58A
	13 @ 220 Vdc	-	0.2A
Isolation Data			
Rated Impulse Withstand Voltage U_{imp}		6 kV	6 kV
Rated Isolation Voltage U_i		690 V	690 V
Pollution Degree		3	3
General Data			
Duty Time		100%	100%
Operating Frequency Without Early Tripping		Up to 15 operations/h or 6 operations/h with 40% duty ration, if the motor breaking current 6 x I_n and the motor starting time does not excees 1s	
Mounting		Mount on the contactor and tighten the screw of the main circuit terminals or with single mounting kit on DIN rail (Ex9RD11.5/25/36/93 only)	
Degree of Protection		IP 20	IP 20
Altitude		Up to 2000m	Up to 2000m

Electrical Connection		**Ex9RD11.5**	**Ex9RD25**	**Ex9RD36**	**Ex9RD93**	**Ex9RD200**	**Ex9RD630**
Connecting Capacity	Main Circuit	18-10 AWG	18-10 AWG	10-8 AWG	8-3 AWG	18-10 AWG	18-10 AWG
	Auxiliary Connect	18-14 AWG	18-14 AWG	18-14 AWG	18-14 AWG	18-14 AWG	18-14 AWG
Stripping Length	Main Circuit (Inch)	0.43	0.49	0.49	0.61	0.43	0.43
	Auxiliary Connect	0.35	0.35	0.35	0.35	0.35	0.35
Tightening Torque	Main Circuit (lb. in.)	10	15	22	100	100	100
	Auxiliary Connect	10	10	10	10	10	10
Connection Screw	Main Circuit	M3.5	M4	M4	M10	M8	M10
	Auxiliary Connect	M3.5	M3.5	M3.5	M3.5	M3.5	M3.5

2017 NOARK Electric • All Rights Reserved

Thermal Overload Relays

Operation Mode

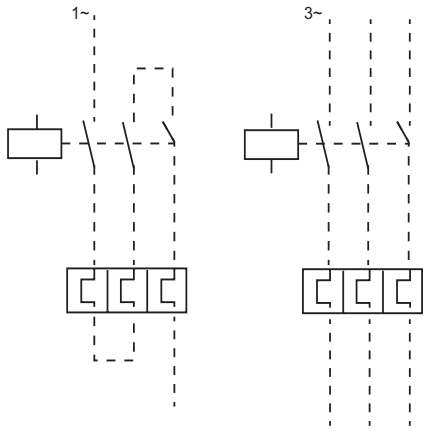

Single-Phase Motor

Three- Phase Motor

	Contact 95-96	Contact 97-98	Status Indication	Comment
Trip State	Open	Closed		
RESET State	Closed	Open	ON	
TEST Manual Reset Mode	Open	Closed		
TEST Auto Reset Mode	Open	Closed		While TEST is Operated
STOP While Device is in Trip State	Open	Closed		STOP Button has no Function
STOP While Device is in RESET State	Open	Open		While STOP Button is Pressed

Wiring and Technical Diagrams

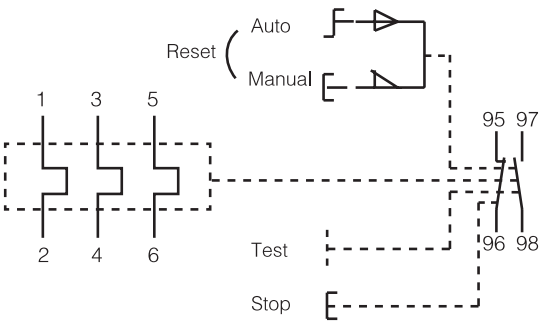

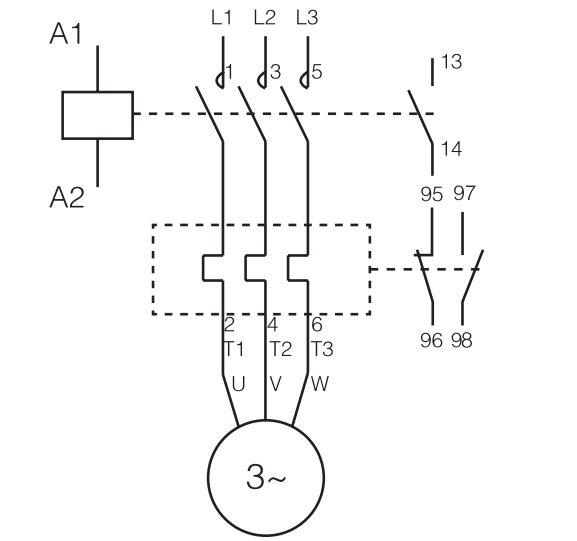

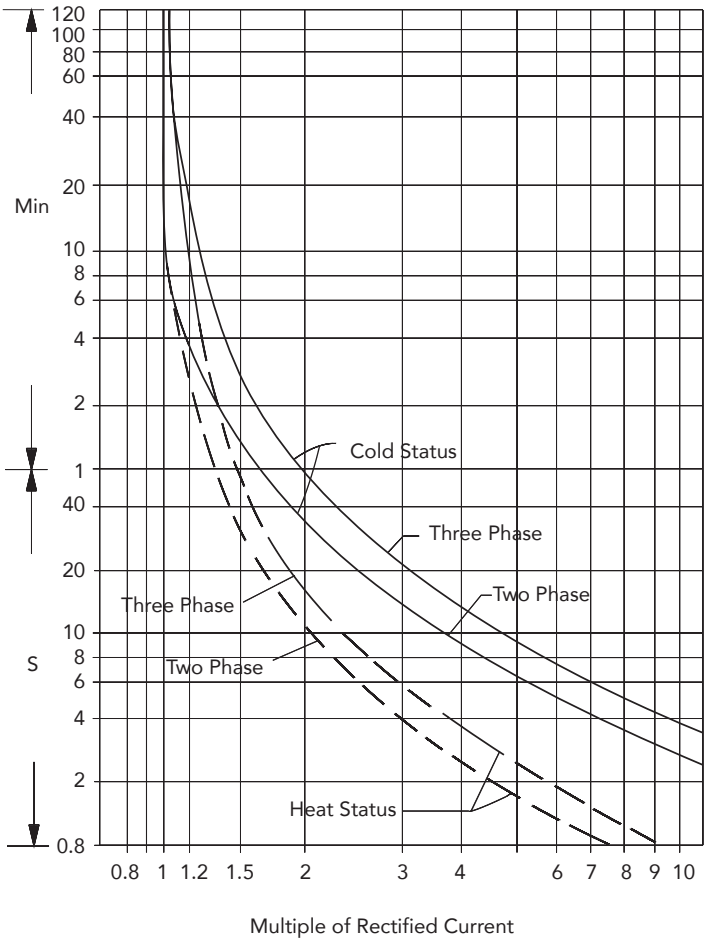

2017 NOARK Electric • All Rights Reserved

Thermal Overload Relays

Rating and Packaging

Product	Setting Range		Full Load Amps (FLA)	Short Circuit Protection Device 480/600 Vac		Full Carton (Pieces)	Weight Per Piece (lbs)
	Lower Value (A)	Upper Value (A)		Matched aM	Fuse gG		
Ex9RD11.5A0.16	0.1	0.16	0.16A	0.25	2	100	0.34
Ex9RD11.5A0.25	0.16	0.25	0.25A	0.5	2	100	0.34
Ex9RD11.5A0.4	0.25	0.4	0.4A	1	2	100	0.34
Ex9RD11.5A0.63	0.4	0.63	0.63A	1	2	100	0.34
Ex9RD11.5A1	0.63	1	1A	2	4	100	0.34
Ex9RD11.5A1.6	1	1.6	1.6A	4	6	100	0.34
Ex9RD11.5A2	1.25	2	2A	2	4	100	0.34
Ex9RD11.5A2.5	1.6	2.5	2.5A	4	6	100	0.34
Ex9RD11.5A4	2.5	4	4A	6	10	100	0.34
Ex9RD11.5A6	4	6	6A	8	16	100	0.34
Ex9RD11.5A8	5.5	8	8A	12	20	100	0.34
Ex9RD11.5A10	7	10	10A	12	20	100	0.34
Ex9RD11.5A13	9	13	13A	16	25	100	0.34
Ex9RD25A0.16	0.1	0.16	0.16A	0.25	2	92	0.42
Ex9RD25A0.25	0.16	0.25	0.25A	0.5	2	92	0.42
Ex9RD25A0.4	0.25	0.4	0.4A	1	2	92	0.42
Ex9RD25A0.63	0.4	0.63	0.63A	1	2	92	0.42
Ex9RD25A1	0.63	1	1A	2	4	92	0.42
Ex9RD25A1.6	1	1.6	1.6A	2	4	92	0.42
Ex9RD25A2	1.25	2	2A	4	6	92	0.42
Ex9RD25A2.5	1.6	2.5	2.5A	4	6	92	0.42
Ex9RD25A4	2.5	4	4A	6	10	92	0.42
Ex9RD25A6	4	6	6A	8	16	92	0.42
Ex9RD25A8	5.5	8	8A	12	20	92	0.42
Ex9RD25A10	7	10	10A	12	20	92	0.42
Ex9RD25A13	9	13	13A	16	25	92	0.42
Ex9RD25A18	12	18	18A	20	35	92	0.42
Ex9RD25A25	17	25	25A	25	50	92	0.42
Ex9RD36A32	23	32	32A	40	63	60	0.63
Ex9RD36A36	28	36	36A	40	80	60	0.63
Ex9RD93A32	23	32	32A	40	63	36	1.16
Ex9RD93A40	30	40	40A	40	100	36	1.16
Ex9RD93A50	37	50	50A	63	100	36	1.16
Ex9RD93A65	48	65	65A	63	100	36	1.16
Ex9RD93A70	55	70	70A	80	125	36	1.16
Ex9RD93A80	63	80	80A	80	125	36	1.16
Ex9RD93A93	80	93	93A	100	160	36	1.16
Ex9RD200A125	80	125	125A	125	200	3	6.92
Ex9RD200A160	100	160	160A	160	250	3	6.92
Ex9RD200A200	125	200	200A	200	315	3	6.92
Ex9RD630A250	160	250	250A	250	400	4	10.15
Ex9RD630A315	200	315	315A	315	500	4	10.15
Ex9RD630A400	250	400	400A	400	630	4	10.15
Ex9RD630A500	315	500	500A	500	800	4	10.15
Ex9RD630A630	400	630	630A	630	800	4	10.15

2017 NOARK Electric • All Rights Reserved

Thermal Overload Relays
Dimensions

Ex9RD11.5
Unit: in. [mm]

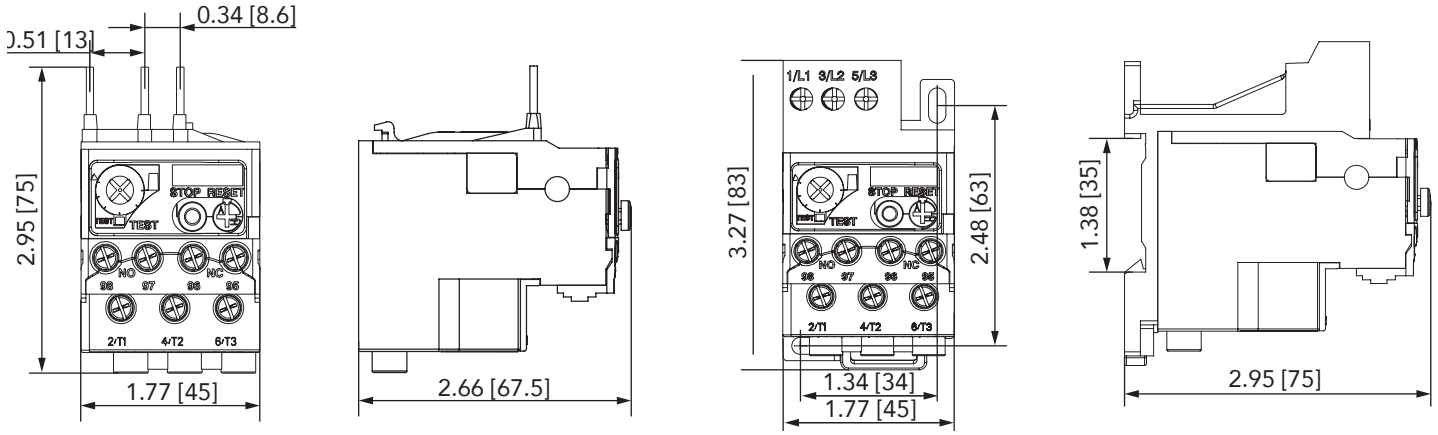

Ex9RD25
Unit: in. [mm]

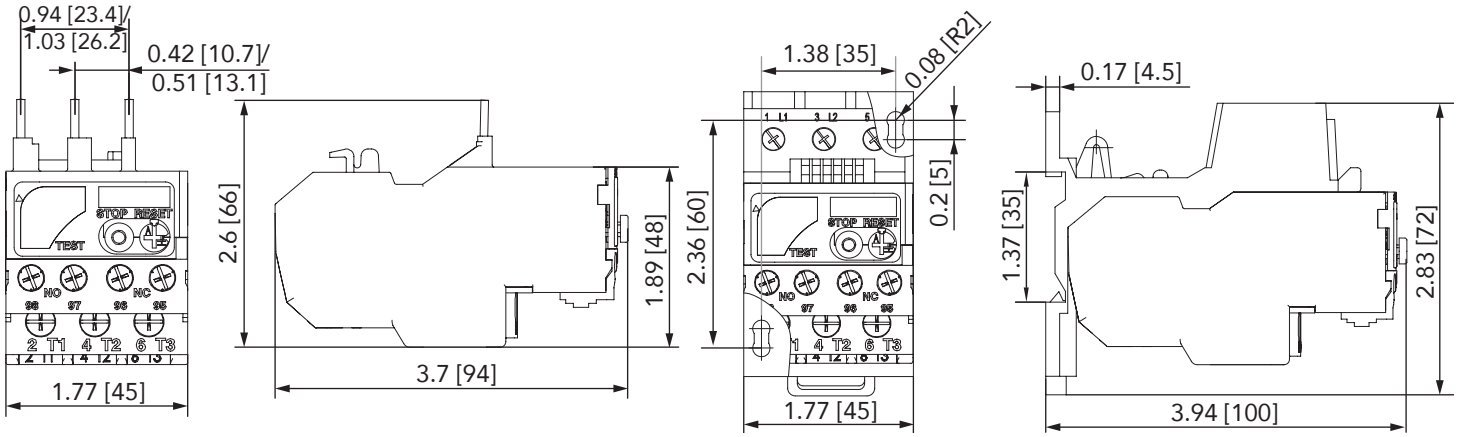

Ex9RD36
Unit: in. [mm]

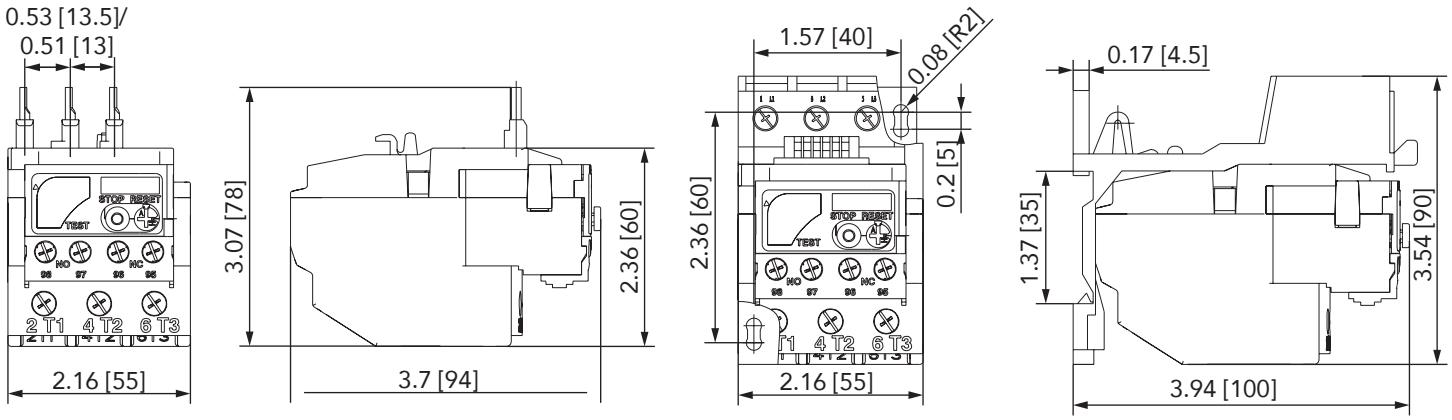

2017 NOARK Electric • All Rights Reserved

Thermal Overload Relays

Dimensions

Ex9RDS93

Unit: in. [mm]

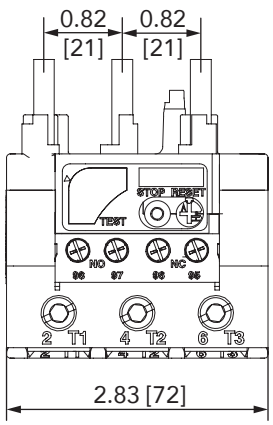

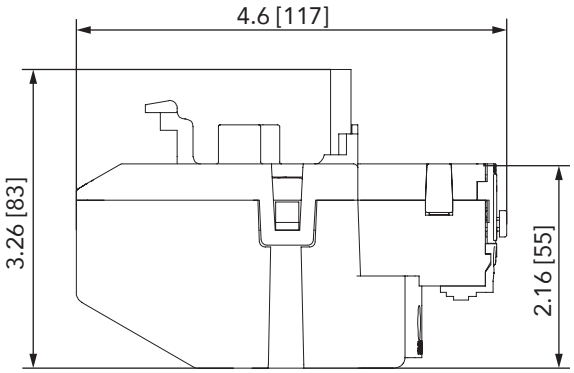

Ex9RD200

Unit: in. [mm]

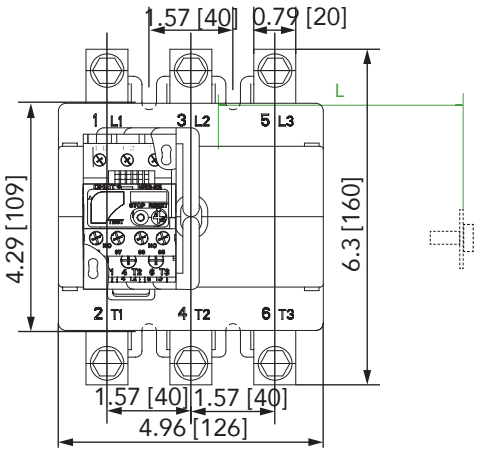

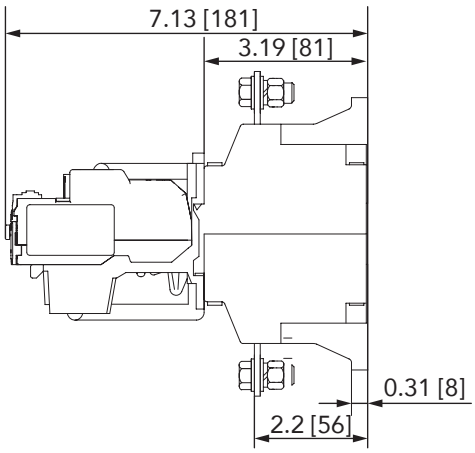

Ex9RD630

Unit: in. [mm]

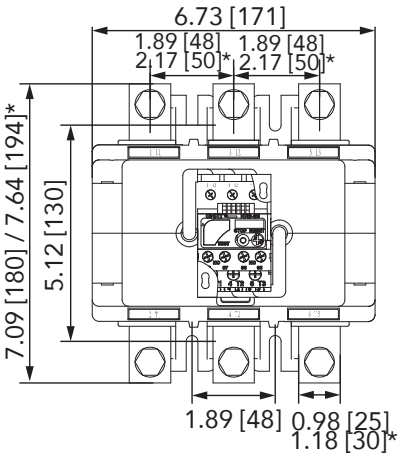

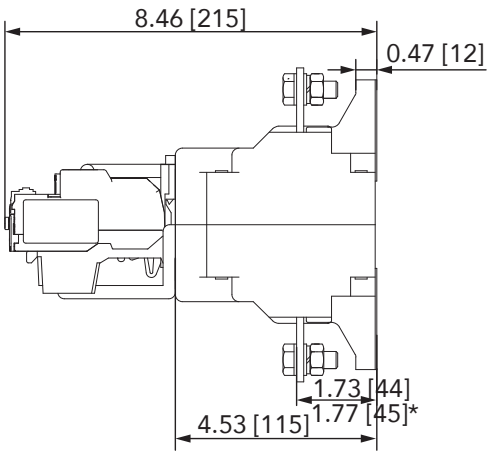

Note: Dimensions with "*" for the product over 400A.

2017 NOARK Electric • All Rights Reserved

NOARK Electric North America
2188 Pomona Blvd, Pomona Ca 91768
(626) 330-7007
na.noark-electric.com • nasales@noark-electric.com

Note: NOARK Electric reserves the right to make technical changes or modify the contents of this document without prior notice. With regard to purchase orders, the agreed particulars shall prevail. NOARK Electric nor any of its affiliates or subsidiaries shall be responsible or liable for potential errors or possible lack of information in this document. NOARK Electric reserves all rights in this document and in the subject matter and illustrations contained therein. Any reproduction, disclosure to third parties or utilization of its contents – in whole or in parts – is forbidden without prior written consent of NOARK Electric.

2013 NOARK Electric • All Rights Reserved

DSTOD201712NA